300# CAST CARBON STEEL FLANGED & BUTTWELD "Y" STRAINERS

MODELS: C8-300 & C7-300

PRESSURE-TEMPERATURE RATINGS (B16.5)	
STEAM:	300 psi @ 838o F
WOG:	740 psi @ 100o F

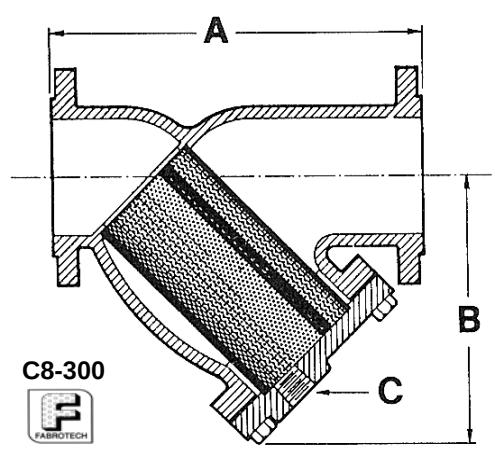

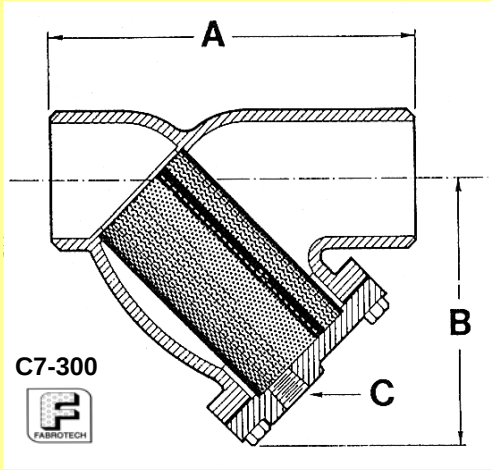

DIMENSIONS & WEIGHTS APPROXIMATE
(Apply for certified drawings)

SERVICE RECOMMENDATIONS

These strainers are designed for dependable service under demanding conditions. They offer complete protection to mechanical equipment such as pumps & valves at high temperatures & pressures. Self cleaning is readily accomplished by opening the plug or valve connected to the blow-off outlet (not supplied).

FEATURES

All sizes feature a bolted cover machined to receive the screen. Studs are ASTM A193B7 & the nuts are A194-2H heavy hex. Covers are furnished with a NPT blowoff tapping, but without a plug.

SCREENS

Fabrotech supplies heavy gauge 304 SS screens which are furnished in the following perforations:

SERVICE:	1/2" - 4"	5" to 14"
Steam:	.033"	.045"
Liquid :	.062"	1/8"

Other materials, such as Monel, Hastelloy C, & Alloy-20 are available. Other perforation sizes and/or mesh lining is also available.

CONSTRUCTION

As a standard, the body is constructed of Carbon Steel ASTM A216 Gr. WCB. Both models are available in Chrome Moly (ASTM A217 Gr. WC6 & WC9). The standard cover is HRS plate. Available in Chrome Moly (WC6 & WC9) & Carbon Moly LCB. The bodies of both the C8-300 & C7-300 are designed to meet 300 lb. ANSI specifications. Model C8-300 has RF flanges and model C7-300 ends are machined to match standard weight pipe. All models have machined seats in the body & cover to ensure accurate screen alignment. Cover gasket is SS spiral wound.

SIZE	in.	1/2"	3/4"	1"	1 1/4"	1 1/2"	2"	2 1/2"	3"	4"	5"	6"	8"	10"	12"	14"
	mm	15	20	25	32	40	50	65	80	100	125	150	200	250	300	350
A	C8-300	6 1/8	7 3/4	7 7/8	7 1/2	7 5/8	8 5/8	10 5/8	12	14 1/2	19 5/16	19 5/16	23 3/8	27 3/8	32	35
	C7-300	6 5/8	8 5/16	8 5/16	10 1/8	10 1/4	8 5/8	10 5/8	12	14 1/2	16 3/8	20	23 3/8	27 3/8	32	35
B	C8-300	3 1/2	3 3/4	3 3/4	4 3/4	4 3/4	5 1/4	6 1/2	7	8 1/4	11 1/4	13 1/2	15 3/4	19	22 1/4	25
	C7-300	3 1/2	3 3/4	3 3/4	5 1/4	5 1/4	5 1/4	6 1/2	7	8 1/4	11 1/4	13 1/2	15 3/4	19	22 1/4	25
C	NPT	3/8	1/2	1/2	1/2	1/2	1/2	1	1	1 1/2	2	2	2	2	2	2
WT (lb)	C8-300	5 1/2	12 1/4	13	18 1/4	18	22	32	49	90	120	181	300	440	650	1075
	C7-300	3	9	9	12	13	10	14	20	40	60	90	168	250	440	765
Clean Cv (gpm)		30	35	40	40	40	70	100	150	250	390	550	900	1500	2200	3100

FABROTECH INDUSTRIES, INC.

Fischer-Robertson, Inc.
3890 Symmes Road
Hamilton, OH 45015
ph 513-860-3445 fx 513-860-4744
www.fischer-robertson.com