Fischer-Robertson, Inc.
3890 Symmes Road
Hamilton, OH 45015
ph 513-860-3445 fx 513-860-4744
www.fischer-robertson.com

Flow Ezy Filters
Filtration Solutions for Oil, Chemicals & Water

Magnetic Filtration

Sub-micron filtration for industrial fluids in precision applications

Fischer-Robertson, Inc.
3890 Symmes Road
Hamilton, OH 45015
ph 513-860-3445 fx 513-860-4744
www.fischer-robertson.com

When precision counts

Driving competitive edge into precision processes

Removes 100% of ferrous contamination*

Magnetic filtration operating principle

Magnetic filtration is the most effective means of removing problem ferrous particles from industrial fluids such as coolants, lubricants and wash solutions.

All the benefits of Magnetic filters are based on their ability to remove 100%* of ferrous particles including sub-micron particles from the process. Traditional filtration systems typically leave particles smaller than 5-10 microns circulating in fluid causing damage to process equipment and finished products.

Magnetic filtration systems are ideal for either new build projects or they can be fitted to enhance existing filtration systems.

Reduces reject rates to zero*
Magnetic filtration enables a cleaner cut or grind, improves surface finish and reduces reject rates.

Significantly lower operating costs

Longer lasting fluids - Extends fluid life by x10*
Magnetic filters remove particles smaller than one micron in size. Traditional barrier filters typically leave particles smaller than 5-10 microns circulating in the fluid. These particles significantly affect the performance of fluids and also act as a focus for bacterial build up.

NO consumables - Cuts filter costs by up to 100%*
Unlike other types of filtration, once magnetic filtration is installed there is nothing else you need to buy to ensure effective filtration over the filter's lifetime, which can be typically greater than 20 years.

Minimal fluid loss
Contamination is removed from the filter as a semi-dry 'cake'. Fluid loss is considerably less than that of traditional filter media.

NO disposal costs*
The cake itself can be recycled, eliminating expensive specialist disposal costs.

Minimal running costs - virtually zero
Manually cleaned magnetic filters require no additional power. Magnetic self-cleaning filters only require a small amount of power for the cleaning process.

Ideal for 24/7 operation
Fully automated magnetic filtration systems are ideal for continuous manufacturing lines.

Rapid return on investment - payback in 3 months*
Magnetic filtration is perfect for cost reduction and continuous improvement programmes providing a rapid return on investment through:

Increased productivity

Maintain flow rates
High flow rates can be maintained without affecting filtration efficiency. Fluid does not flow through filter media, so flow is uninterrupted. Flow rates are determined by your process requirements, not by your filter.

NO back pressure
Even when the filter is 'full' there is no blinding or risk of burst filters, reducing downtime.

Reduced wear / precision finish
Particles that pass through traditional filters act as an abrasive, wearing parts, machinery and product. Magnetic filters remove these damaging particles.

Fine filtration
Conventional filtration media, at 5 microns and below, can strip oils of anti-foaming, anti-bacteria and other additives. Magnetic filtration enables sub-micron filtration without affecting the oil's properties, and can actually aid the effective control of bacteria.

* Subject to operating conditions.

Fischer-Robertson, Inc.
3890 Symmes Road
Hamilton, OH 45015
ph 513-860-3445 fx 513-860-4744
www.fischer-robertson.com

Reduced environmental impact

A major consideration for any business is its responsibility to the environment. Magnetic filtration is a positive contribution to companies' environmental policies and ISO14001 accreditation.

Reduced waste

Magnetic filtration requires no consumable or disposable products. It extracts 100%* of ferrous contamination, drastically reducing the use of disposable filter media. Less fluid is used as its effectiveness is maintained for longer.

Recycled waste

Ferrous particles are separated from fluid and filtration media so can be recycled rather than disposed of.

Fischer-Robertson, Inc.
3890 Symmes Road
Hamilton, OH 45015
ph 513-860-3445 fx 513-860-4744
www.fischer-robertson.com

Magnetic filtration

Driving competitive edge in demanding applications

Automotive

Magnetic filtration is widely used in the automotive industry within OEMs and tier 1 and 2 suppliers for the manufacture of powertrain and engine components.

ADVANTAGES
- High precision finish
- Reduced downtime
- 100% effective with cast iron particles
- Ideal for 24/7 operation
- Flow rates up to 5000 litres: multi-use to increase flow capacity.
- Can be retrofitted on existing systems
- Rapid return on investment
- Reduced waste – ISO14001

TYPICAL APPLICATIONS
- Ring & pinion gear lapping
- Turbocharger balancing machines
- Crank shaft gun drilling
- Valve face grinding
- Cam shaft grinding
- Cylinder liner honing
- Engine liner grinding
- Gear cutting and finishing
- Valve seal ring lapping
- Wash systems
- Fuel injector drilling and grinding
- Brake pad grinding
- Cast iron piston bushing milling

Bearings

Magnetic filtration is used by some of the world's largest bearing manufacturers to ensure sub-micron accuracy in the production of bearing components.

ADVANTAGES
- High precision product finish, concentricity and consistency
- Reduced downtime
- Sub-micron filtration
- Ideal for high volume processes
- Can be retrofitted to existing lines
- Rapid return on investment
- Reduced waste – ISO14001

TYPICAL APPLICATIONS
- Hub honing
- Ball grinding
- Super-finish/polishing
- Ring grinding
- Raceway grinding
- Wash systems

Wash systems

It is vital that wash solutions are kept free from ferrous particles. Many wash systems have benefitted from installation of magnetic filtration which ensures the finished product is clean and complies with quality inspection.

ADVANTAGES
- Flow rates up to 5000 litres per minute
- Filters do not degrade in wash solutions
- Removes ferrous deposits from finished product
- Reduces reject rates

TYPICAL APPLICATIONS
- Rotary wash systems
- Transfer wash stations
- Degreasing equipment
- Multi-stage washers
- Spray wash stations

Case study

Company
Bombardier (Austria)

Application
Cast iron piston bushings

Process
Milling and gun drilling
Filtramag removed sub-micron particles reducing abrasive wear on tools and parts. Tool changes and product reject rates were reduced to virtually zero.

Case study

Company
Tsubaki-Hoover (Poland)

Application
Steel ball and rollers

Process
Super-finishing
Micromag improved on 20 micron paper filters by extracting sub-micron ferrous particles. Surface finish was improved and reject rates fell dramatically.

Case Study

Company
Permoid (UK)

Application
Automotive fuel tanks

Process
Flushing rig
Reduced product reject rates to zero, reduced disposal and purchase of barrier filters by 95%.

Fischer-Robertson, Inc.
3890 Symmes Road
Hamilton, OH 45015
ph 513-860-3445 fx 513-860-4744
www.fischer-robertson.com

Steel processing

Magnetic filtration can improve efficiency in most steel processing operations such as steel production, both hot and cold.

ADVANTAGES
- Automated cleaning ideal for heavy contamination
- Improved surface finish
- Reduced downtime
- Suitable for arduous environments
- 24/7 operation

TYPICAL APPLICATIONS
- Steel rolling mills
- Sawing machines
- Steel pipe cutting
- Tube threading equipment
- Steel quenching tanks
- Surface treatment processes
- Spray bars
- Roller lubrication
- Final wash process
- Deep hole drilling

Machine tool OEMs

Magnetic filtration enhances performance on a variety of machine tools. It offers a competitive edge to machine tool manufacturers particularly when servicing high precision applications.

ADVANTAGES
- Can be retrofitted to enhance existing filtration systems
- Reduces machine maintenance/ downtime
- Ideal for 24/7 operation
- Flow rates 70 to 5000 litres per minute
- 100% effective with low magnetic materials e.g. cast iron and tungsten carbide
- Increases the equipment, value provides a solution for the customer.

TYPICAL APPLICATIONS
- VMC, HMC, and CNC machines.
- Multi-axis vertical turning centres
- Grinding
- Honing
- Lapping
- Deep hole/gun drilling
- EDM machines
- Laser cutters

Tool cutting

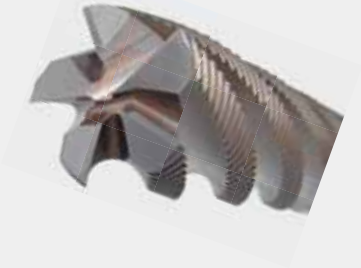

High intensity magnetic filtration is the only option available to guarantee a high precision finish on tool cutting operations. It is widely used in the manufacture and refurbishment of high speed steel and tungsten carbide cutting tools. High intensity magnets ensure outstanding performance even with particles which have only 20% magnetic permeability.

ADVANTAGES
- Enables tolerances of < 1 micron
- Enables manufacture of “mirror” finish tools
- Can increase the value of tools by 300%
- 100% effective with low magnetic materials e.g. tungsten carbide materials
- Reduces wear on grinding wheels
- Ensures clear grinding contact
- Ideal for 24/7 or unmanned operations
- Significantly extends fluid life

TYPICAL APPLICATIONS
- Multi axes CNC machines
- Tungsten carbide drills and endmills
- Radius grinding
- Wood working tool superfinish
- “Mirror” finish plastic cutters

Case Study

Company
Steelscape (USA)

Application
Steel rolling and pickling

Process
Surface spray system
Heavy contamination blocked barrier filters within hours. Automag extracts 12000 Kg contamination / month – reject rates have fallen to zero.

Case study

Company
Schaudt Mikrosa (Germany)

Application
CNC Manufacture

Process
Camshaft Grinding

Reduced downtime by 50% and increased the life of grinding wheels by 30%.

Case study

Company
Pro-Cut Tooling (UK)

Application
Carbide cutting tools manufacture/repair

Process
Super-finish/grinding
Enabled manufacture of “mirror” finish cutting tools, reduced machine cleaning downtime by 75% and extended fluid life by 250%.

Fischer-Robertson, Inc.
3890 Symmes Road
Hamilton, OH 45015
ph 513-860-3445 fx 513-860-4744
www.fischer-robertson.com

Give your business the edge… A few of our many satisfied customers…

Borg Warner Turbocharger Balancing Machines

Product: Micromag / Filtramag

Maintenance Engineer "Before fitting Micromag we were changing filters every few days. We invested about £1200 in 4 MM5s we estimate this saves us around £28,000 annually in cartridge filter costs, not to mention the resultant downtime. Following the success we have now fitted Filtramags to our grinding machines which have cut our product reject rates to virtually zero."

Milacron Machines Sub-Contract Machining

Product: Double AM12 Skid

Facilities Manager "The Double AM12 Skid has increased our efficiency. We work 24 hours a day and our 18″ heads cut some big pieces of steel. Magnetic filtration has dramatically cleaned up our fluids and improved the surface finish we can offer. It extracts around 50Kg per day of ferrous waste and easily handles the flow and contamination generated by the multi-machine cell."

Collison Goll Steel Stock Deep Hole Drilling

Product: Micromag

Plant Manager "Micromag has paid back in just a few weeks, previously we could only take out particles of 50 micron or over, which caused the fluid channels to get plugged and drills to crash. Now I have fitted Micromag, my purchase of drill bodies has fallen by 100%. I am planning to fit Micromag to all my machines."

Leitz Group Grinding & Polishing of Cutting Tools

Product: Filtramag

Chief Maintenance Engineer "Filtramag has increased our fluid life by 20%, reduced our downtime and our product reject rates have fallen dramatically. Filtramag extracts approximately 12Kg of ferrous particles every week and has dramatically cut our costs in replacement paper filters and damaged pumps."

Fischer-Robertson, Inc.
3890 Symmes Road
Hamilton, OH 45015
ph 513-860-3445 fx 513-860-4744
www.fischer-robertson.com

Scania
Grinding and Honing Automotive Gears

Product: Filtramag

Engineering Manager "Magnetic filtration has been a great positive for our production. With the sub-micron filtration Filtramag offers, we have minimised our product reject rates and tool changes. In addition I estimate our oil lifespan has increased by about 30%."

Cascade
Heat Treatment of Fork Lift Parts

Product: Automag AM12

Plant Engineer "We had a real problem with downtime as our quenching tank regularly filled up with ferrous contamination – we had to halt production and clean out the tank. Automag has been a smart investment. The automated cleaning frees up my maintenance team and we will get rapid payback through reduced process downtime."

NSK
Super-finishing of Bearing Hubs

Product: Micromag

Operations Manager "When we used only barrier filtration we had a constant problem with 'blinding' of the honing stone due to a build-up of ferrous particles. Fitting Micromag has been a real positive step, we can now guarantee a uniform high quality finish and our reject rates are minimal."

Honda
Engine Valve Machining (UK)

Product: Micromag

Engineering Manager "Micromag's outstanding filtration capability and short investment payback period exactly matched our needs. Since incorporating Micromag into our process our machine downtime has fallen dramatically compared to our previous filtration system and our filtration effectiveness is much better as we can extract the smallest particles."

Fischer-Robertson, Inc.
3890 Symmes Road
Hamilton, OH 45015
ph 513-860-3445 fx 513-860-4744
www.fischer-robertson.com

Micromag

High Intensity - Rare Earth

Datasheet no. 401

The patented, compact Micromag magnetic filter can benefit many different industries.

Contaminated fluid enters the inlet port where it is dispersed by the unique tapered radial flow channels. Fluid passes down the outside of the centrally mounted rare earth magnetic core which captures contamination particles along its length, resulting in excellent filtration efficiency.

The geometry of the magnetic flux circuit means that contamination builds up in a controlled way, ensuring that the filter can never block, irrespective of how much contamination is held. Channels remain open allowing fluid to continue to flow freely.

The filtered fluid flows through the return slots located in the upper section of the magnetic core, down through the centre and exits through the outlet port.

Cleaning

Using the supplied cleaning tool, a fully contaminated core can be cleaned in under 30 seconds. Only metallic particles are removed from the filter and these can be easily disposed. There are no dirty cartridges!

Suitable Products

Neat and soluble oils.

Installation Location

Pre- or post-pump, delivery line or pre-membrane cartridge.

Benefits

- Sub-micron filtration
- Large holding capacity
- High intensity rare earth magnetic material
- Clear bowl
- Suitable for all machining applications
- Environmentally responsible
- No consumables

Category

Medium pressure.

Magnetic circuit & fluid flow path.

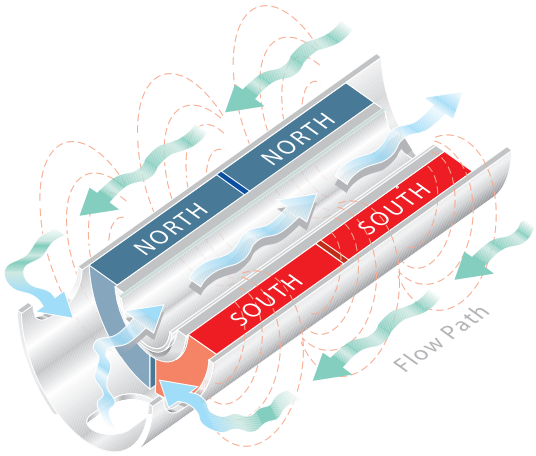

Fischer-Robertson, Inc.
3890 Symmes Road
Hamilton, OH 45015
ph 513-860-3445 fx 513-860-4744
www.fischer-robertson.com

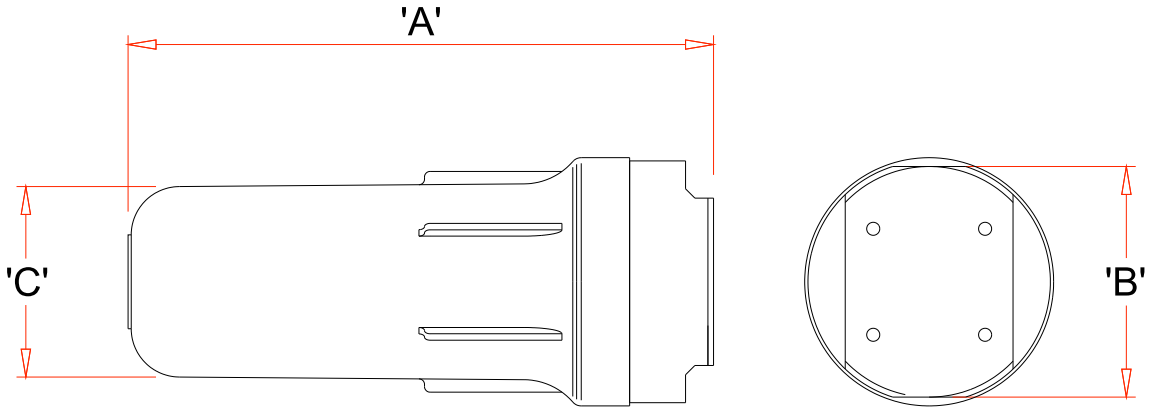

Product number	Flow rate	Contamination capacity	Max. operating pressure	Connection	Temperature range	Construction	Dimensions inches		
	Gallons/min	lbs	psi	NPT (in)	F		A	B	C
MM5 /1.0	18	2.2	174	1	41-122	SAN housing, aluminum lid	7.5	3.7	4.1
MM10 /1.0	26	4.4	174	1	41-122		12.4	4.0	4.9
MM20 /1.5	40	8.8	174	1½	41-122		23.9	4.0	5.3

Performance

Maximum Pressure 174 psi
Magnetic Performance High intensity
Circuit Design Open
Magnetic Material rare earth neodymium iron boron
Magnet Grade N45 – Inspected & confirmed via hystergraph prior to use
Temperature 41 – 122F

Materials

Housing Styrene Acrylo Nitrile (SAN)
Lid Marine grade aluminum, anodised blue
Magnetic Core 304 Grade stainless steel
Sealing Nitrile O-ring

Options

Viton O-ring
Bowl spanner
Core cleaning post
Mounting bracket
Port adaptors

Micromag hp50

Ultimate Filtration Technology

High intensity magnetic filter

Fischer-Robertson, Inc.
3890 Symmes Road
Hamilton, OH 45015
ph 513-860-3445 fx 513-860-4744
www.fischer-robertson.com

The Micromag HP/50 has all the same benefits of the standard Micromag but has been developed to suit high pressure through spindle-coolant applications, where the smallest of particles can damage seals, spindles and even reduce the efficiency of the cutting tool.

Micromag HP/50 can be installed anywhere in the fluid delivery system and will ensure that even sub-micron magnetic and para-magnetic particles are removed before they can cause any expensive damage.

For further information relating to the benefits and operation of the Micromag HP/50 please refer to the supplied standard Micromag brochure.

Cleaning

Using the supplied cleaning tool, a fully contaminated core can be cleaned in under 30 seconds. Only metallic particles are removed from the filter and these can be easily disposed. There are no dirty cartridges!

Suitable Products

Neat & soluble oils.

Installation Location

Pre or post pump, delivery line, spindle feed or pre membrane cartridge.

Benefits

- High pressure
- Sub micron filtration
- Large holding capacity
- High intensity rare earth magnetic material
- Suitable for all machining applications
- Environmentally responsible
- No consumables

Category

High Pressure.

Fischer-Robertson, Inc.
3890 Symmes Road
Hamilton, OH 45015
ph 513-860-3445 fx 513-860-4744
www.fischer-robertson.com

Technical Data:-

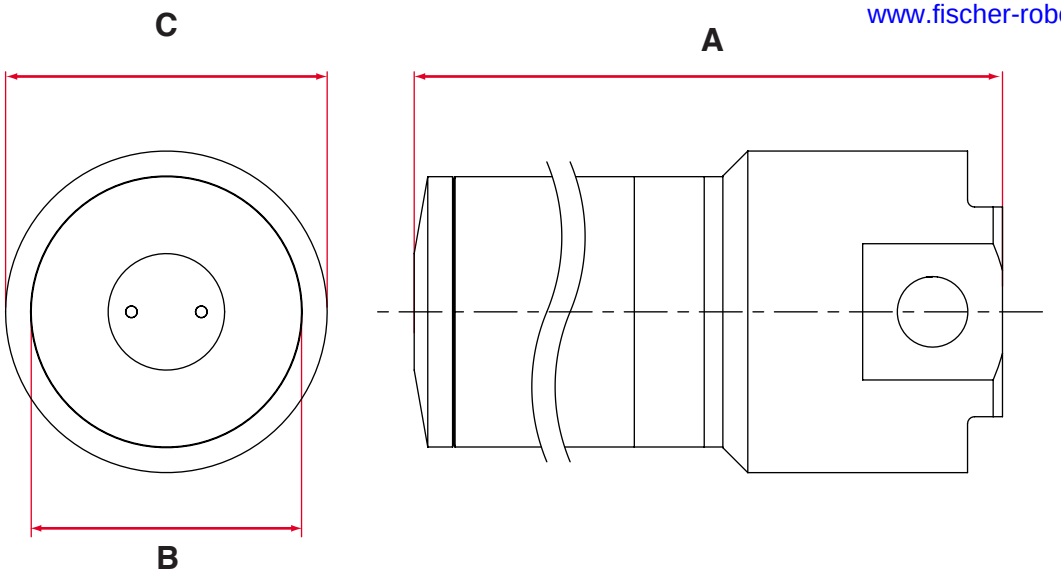

Product number	Flow rate	Contamination capacity	Max. operating pressure	Connection	Temperature range	Construction	Dimensions inches		
	Gallons/min	lbs	psi	NPT (in)	F		A	B	C
MM5/HP/50 NPT	18	2.2	725	1	32 – 284	Full aluminum construction	9.7	4.6	4.9
MM10/HP/50 NPT	26	4.4	725	1	32 – 284		14.3	4.6	4.9
MM20/HP/50 NPT	40	8.8	725	1½	32 – 284		24.6	4.6	4.9

Performance

Maximum Pressure 725psi

Magnetic Performance: High Intensity

Circuit Design: Open

Magnetic Material: Rare Earth Neodymium Iron Boron

Magnet Grade: N45 – Inspected & confirmed via hystergraph prior to use

Temperature: 32-284 F

Materials:-

Housing: Aluminium

Lid: Aluminium

Tube: 304 Grade stainless steel

Surface: Finish Machined and anodised

Sealing: Viton O-ring

Options

Core cleaning post

Mounting bracket

Port adaptors

Fischer-Robertson, Inc.
3890 Symmes Road
Hamilton, OH 45015
ph 513-860-3445 fx 513-860-4744
www.fischer-robertson.com

Micromag hp 80

Ultimate Filtration Technology

High intensity magnetic filter

The Micromag HP/80 follows on from the standard Micromag and has all of the same incredible benefits. This unit was developed to suit high pressure through spindle coolant applications, where the smallest of particles can damage seals, spindles and even the efficiency of the cutting tool.

Micromag HP/80 can be installed anywhere in the fluid delivery system and will ensure that even sub micron magnetic and paramagnetic particles are removed before they can cause any expensive damage.

For further information relating to the benefits and operation please refer to the supplied standard Micromag brochure.

Cleaning

Using the supplied cleaning tool, a fully contaminated core can be cleaned in under 30 seconds! Leaving you with only the metallic particles, which can be easily disposed of, no dirty cartridges!

Suitable Products

Neat & soluble oils.

Installation Location

Pre or post pump, delivery line, spindle feed or pre membrane cartridge.

Benefits

- High pressure rated
- Sub micron filtration
- Large holding capacity
- High intensity Rare Earth magnetic material
- Full Stainless Steel construction
- Suitable for all machining applications
- Environmentally ethical
- No consumables

Category

High Pressure.

Fischer-Robertson, Inc.
3890 Symmes Road
Hamilton, OH 45015
ph 513-860-3445 fx 513-860-4744
www.fischer-robertson.com

Technical Data:-

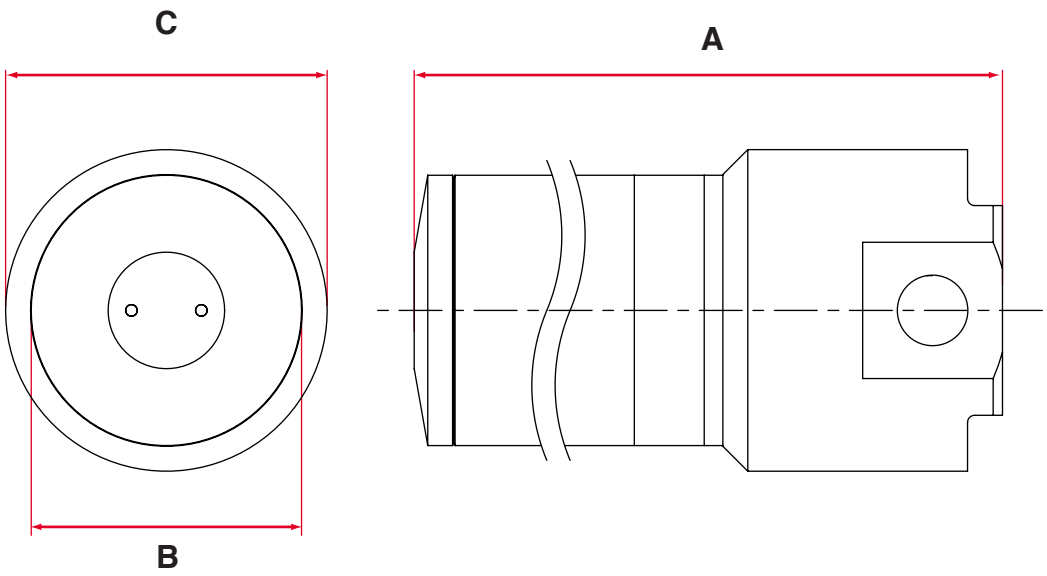

Product number	Flow rate	Contamination capacity	Max. operating pressure	Connection	Temperature range	Construction	Dimensions inches		
	Gallons/min	lbs	psi	NPT (in)	F		A	B	C
MM5/HP/80 NPT	18	2.2	1160	1	32 – 284	Full stainless steel construction	9.7	4.6	4.9
MM10/HP/80 NPT	26	4.4	1160	1	32 – 284		14.3	4.6	4.9
MM20/HP/80 NPT	40	8.8	1160	1½	32 – 284		24.6	4.6	4.9

Performance

Maximum Pressure 1160psi

Magnetic Performance: High Intensity

Circuit Design: Open

Magnetic Material: Rare Earth Neodymium Iron Boron

Magnet Grade: N45 – Inspected & confirmed via hystergraph prior to use

Temperature: 32-284 F

Materials:-

Housing: 316 Grade Stainless Steel

Lid: 316 Grade Stainless Steel

Tube: 316 Grade Stainless Steel – Aerospace Quality

Filtramag+
Ultimate Filtration Technology

High intensity magnetic filter

Fischer-Robertson, Inc.
3890 Symmes Road
Hamilton, OH 45015
ph 513-860-3445 fx 513-860-4744
www.fischer-robertson.com

Filtramag+ is a high performance magnetic filter with full stainless steel construction which makes it suitable for use in a variety of industry sectors and applications.

- Patented design
- Easy installation
- Unique dual flow technology™ – maximises collection capability
- Operates at up to 290psi bar
- Removes both magnetic and non-magnetic contamination
- Minimal pressure drop
- In-line connections
- Ideal for use in harsh chemical environments

Dual flow techology™

Filtramag+ is the most efficient filter of its type. The dual chambered design means that fluid is exposed to the high intensity magnets for the maximum time thus ensuring almost 100% of contamination is removed on first pass through the filter. The patented magnetic circuit on the 4,000 gauss version design ensures that the filter can never block even in high contamination applications.

Magnetic core options

High intensity magnetic cores ensure particle filtration down to sub-micron size. For standard machining or wash system applications a 4,000 gauss magnetic core pack is available. For applications which involve lower magnetically permeable materials e.g. Cast Iron and Carbide or require an ultra-precise surface finish an 11,000 gauss magnetic core pack is available.

Benefits

Using fully filtered fluids, free from ferrous particles provides:-

- Improved surface finish
- Cost savings on disposable filtration media
- Extended fluid lifespan
- Reductions in waste disposal
- Longer lasting tools and machinery

Suitable fluids

Oil, coolants, fuel, ink, paint, chemicals.

Suitable locations

Pre & Post fluid holding tank, machine or process

Typical applications

- With carbide or cast iron materials
- General machining operations
- Inks/paints
- Wash systems
- Diesel/gasolene
- Slurry/glazes

Filtramag+ Components

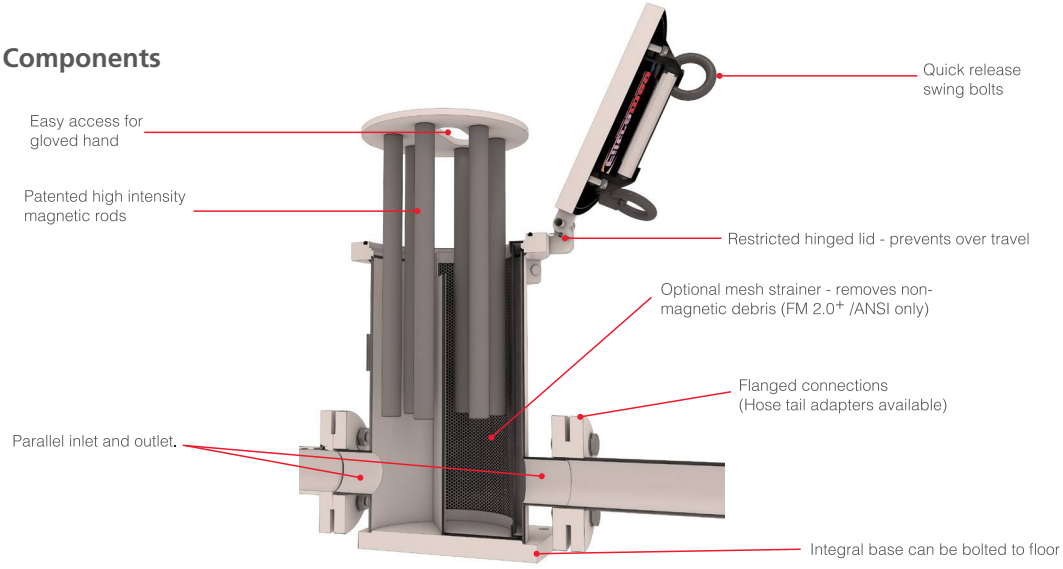

Fischer-Robertson, Inc.
3890 Symmes Road
Hamilton, OH 45015
ph 513-860-3445 fx 513-860-4744
www.fischer-robertson.com

Technical Data

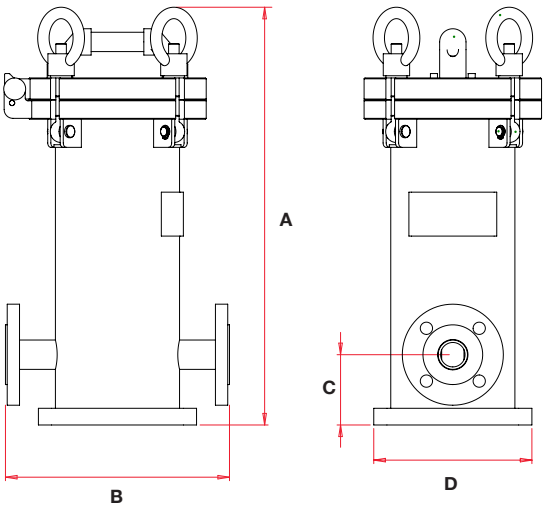

Product number	Max. flow rate	Contamination capacity	Max. operating pressure	Connection	Dimensions inches			
	Gallons/mins	lbs	PSI	ANSI "	A	B	C	D
FM1.5$^+$/ANSI	66	6.6	290	1½	15.5	10	3.9	7.1
FM2.0$^+$/ANSI	132	13.2	290	2	17.4	13	3.9	9.8

Part Numbers (including spares)

Part Number	Description
FM1.5$^+$/ANSI	FM1.5$^+$ unit with 4,000 magnet cartridge, cleaning tool & cleaning tray
FM2.0$^+$/ANSI	FM2.0$^+$/ANSI unit with 4,000 magnet cartridge, cleaning tool & cleaning tray
FM1.5$^+$/ANSI /11K	FM1.5$^+$/ANSI unit with 11,000 magnet cartridge, cleaning tool & cleaning tray
FM2.0$^+$/ANSI /11K	FM2.0$^+$/ANSI unit with 11,000 magnet cartridge, cleaning tool & cleaning tray
FM1.5$^+$/ANSI/MC	4,000 magnet cartridge for FM1.5$^+$/ANSI units
FM2.0$^+$/ANSI/MC	4,000 magnet cartridge for FM2.0$^+$/ANSI units
FM1.5$^+$/ANSI /MC11K	11,000 magnet cartridge for FM1.5$^+$/ANSI units
FM2.0$^+$/ANSI /MC11K	11,000 magnet cartridge for FM2.0$^+$/ANSI units
FM2.0$^+$/ANSI /MB0.5	Optional 0.5mm mesh basket for FM2.0$^+$/ANSI units
FM2.0$^+$/ANSI/MB1.0	Optional 1.0mm mesh basket for FM2.0$^+$/ANSI units
FM1.5$^+$/ANSI /VS	Spare Viton seal for FM1.5$^+$/ANSI units
FM2.0$^+$ /ANSI /VS	Spare Viton seal for FM2.0$^+$/ANSI units

Magnetic Performance

Maximum Pressure 290psi

Magnetic Performance Standard option 4,000 gauss, high intensity option 11,000 gauss

Magnet material Rare earth neodymium iron boron NdFeB

Magnet grade N35 (Standard option) N45 (High intensity option)

Temperature 23 to 176F

Materials

Housing 304 Grade Stainless Steel

Lid 304 Grade Stainless Steel

Tube 316 Grade Stainless Steel

Surface finish External–powder coated

Sealing Viton O-ring

Mesh strainer 304 Grade Stainless Steel

Swing bolts High tensile steel

Cleaning Tool Stainless steel

Mesh strainer options (FM2.0$^+$/ANSI only) 0.02inches and 0.04inches aperture size

If you have any more questions, require technical assistance or would like a quotation, please contact us.

Fischer-Robertson, Inc.
3890 Symmes Road
Hamilton, OH 45015
ph 513-860-3445 fx 513-860-4744
www.fischer-robertson.com

Automag

Self Purging Magnetic Filter – High Intensity

Datasheet no. 404

The patented Automag unit is the latest generation of self- purging high intensity magnetic filters for high flow, high contamination industrial applications.

The Automag has two flow chambers. Fluid enters the inlet chamber where primary filtration takes place. The partly treated fluid flows into a second chamber where it is slowed down so that the final filtration treatment can take place. It then returns to the process.

Installing Automag will improve your manufacturing effectiveness and reduce operator intervention.

Using fully filtered fluid, free from micron sized particles will:

- Improve surface finish
- Extend tool/wheel life
- Improve fluid flow
- Cut costs on scrap reduction
- Reduce downtime

All applications, which use pumped cutting fluids will benefit from using this equipment.

Typical Applications

- Grinding
- Honing
- Milling
- Fine finishing

Cleaning

A signal from your control system activates the outlet valve (not included) so fluid is redirected to a purge tank or reclamation unit (available as an option), then the centrally positioned pneumatic cylinder withdraws the magnetic elements from the filter.

When the contamination has been purged the magnetic elements are reinserted and the outlet valve is returned to position, bringing the unit back online. The complete cleaning cycle take 10-15 seconds depending on fluid type and filter location.

Suitable Fluids

Oil, coolant, water.

Suitable Locations

Pre- & post-fluid holding tank, machine or process.

Benefits

- Double magnetic length
- High collection capacity
- Removes micron sized contamination
- Self purging
- Rare earth high intensity magnetic material
- Compact
- No maintenance

Fischer-Robertson, Inc.
3890 Symmes Road
Hamilton, OH 45015
ph 513-860-3445 fx 513-860-4744
www.fischer-robertson.com

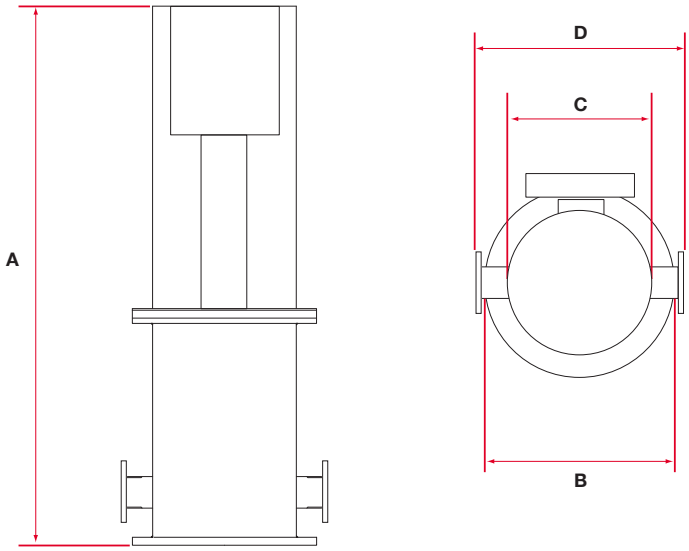

Product Information

Product number	Max. flow rate	Contamination capacity	Max. operating pressure	Connection	Dimensions Inches			
	Gallons/min	lbs	PSI	Flanged (in)	A	B	C	D
AMC	52	5	145	1½	28.7	9.0	7.9	11.8
AM6	119	15	145	2	41.9	15.5	10.8	17.7
AM12	238	30	145	3	45.0	22.2	15.9	24.4

Performance

Maximum Pressure 145psi
Magnetic Performance AM6 & AM12 9000 Gauss, AMC 6000 Gauss
Performance Reading On tube surface
Magnetic Material rare earth neodymium iron boron
Magnet Grade N45 – Inspected & confirmed via hysterograph prior to use
Temperature 41–176 F

Materials

Filter Body 304 Grade stainless steel, powder coated white
Filter Cover 304 Grade stainless steel, powder coated silver
Control Box Aluminium, powder coated white
Pneumatic Cylinder Festo
Solenoid Valve ASCO
Limit Switch Proximity Sensors, RS origin

Options

Simple timer control box
Purge valve arrangement
Super high flow rate systems
Pre-programmed PLC controls
Complete mounting skid arrangement
Purge fluid collection tank and reclaim system

If you have any more questions, require technical assistance or would like a quotation, please contact us.

Fischer-Robertson, Inc.
3890 Symmes Road
Hamilton, OH 45015
ph 513-860-3445 fx 513-860-4744
www.fischer-robertson.com

Autofiltrex

Ultimate Filtration Technology

Fully Automated Magnetic Filtration

NEW

A new generation in filtration.

Autofiltrex

Ultimate Filtration Technology

Fischer-Robertson, Inc.
3890 Symmes Road
Hamilton, OH 45015
ph 513-860-3445 fx 513-860-4744
www.fischer-robertson.com

When precision counts

Sub-Micron Magnetic Filtration

Magnetic filtration is the most effective means of removing problem ferrous particles from industrial fluids such as coolants, oils and other lubricants.
Its' success is based on an ability to remove ferrous contamination, including sub-micron particles, without the need to replace consumable filter items or affecting the fluid's key properties. Traditional filtration systems typically leave ferrous particles smaller than 5-10 microns circulating in the fluid causing damage to process equipment and finished products.

Autofiltrex works off-line, taking dirty fluid from the holding tank and returning clean fluid. The fluid "polishing" process continues even when the machine is not in use.

Applications
Autofiltrex is ideal for most ferrous machining applications such as grinding, honing, lapping, forming and quenching processes.

Key product features

- **24/7** Fully automated operation
- **Sub-micron** performance filtration
- **Compact,** occupies minimal floorspace
- **"Plug and play"** - minimal set up
- Can interface with **CNC** controls
- Incorporates **high intensity** magnetic technology
- Includes **filter, pump , PLC** and **magnetic reclaim unit**

Autofiltrex benefits

- Rapid return on investment – capital cost v **cost savings**
- Ensures **24/7 "Ultra-polished"** fluids – (without removing key fluid additives)
- Extends **fluid life** by up to **10x**
- Huge **improvements** in **part surface** finish
- Can **reduce** spend on filter consumables to **zero**
- Fit and forget - **24/7 uninterrupted** filtration
- On-going **protection** for machinery and tools

Off-line Operation

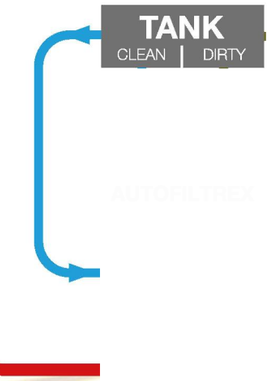

The Process

A **high intensity magnetic circuit** extracts contamination particles, whilst an **automated** purging process periodically diverts the contamination to a purge tank. Then, a magnetic reclaim **removes** the ferrous **contamination** into a collection box ready for recycling. No fluid is lost!

Autofiltrex
Ultimate Filtration Technology

Fischer-Robertson, Inc.
3890 Symmes Road
Hamilton, OH 45015
ph 513-860-3445 fx 513-860-4744
www.fischer-robertson.com

Dimensions

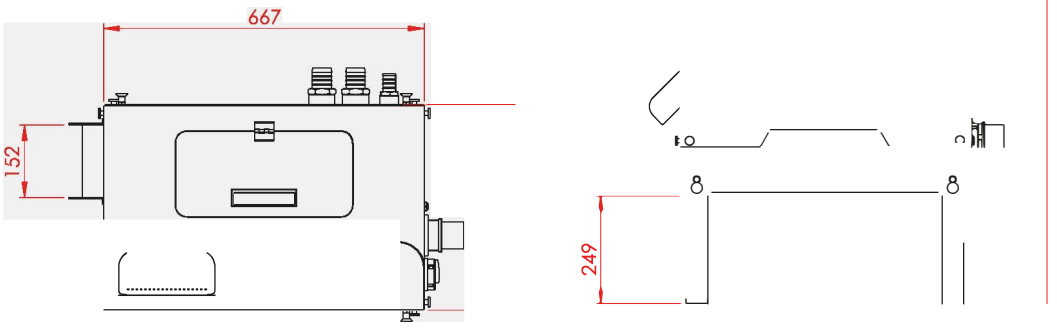

General Specifications

Maximum operating temperature: 80°C
Inlet size: 1" Hose (includes steel mesh strainer)
Outlet sizes: 2 x 1½" Hose
Solenoid valves: 24v spring return pneumatic valves
Power requirements: 230v 50Hz (also available 110v 60Hz version)
both using IP67 rated standard sockets. All components 24v.
Supplied with: removable contamination collection bin
Supplied with: lifting frame for positioning and moving on site
Requires: 5-7 bar air supply (8mm push fit connection included)
Flow rate: 60 litres per minute
Unit weight: 90 kg

Material Specifications

Filter and reclaim tank body: 304 stainless steel
System cover: Aluminium
Pneumatic cylinders: Aluminium
Seals: NBR rubber

Also available for larger applications
(flow rates up to 10,000 litres per minute)
see our **Automag Skid**
fully automated filtration systems.

International PCT Patent Application No. PCT/GB2011/050029

Fischer-Robertson, Inc.
3890 Symmes Road
Hamilton, OH 45015
ph 513-860-3445 fx 513-860-4744
www.fischer-robertson.com

Automag skid

Fully automated, self-contained magnetic filtration and fluid recovery system

Automag skid

Fischer-Robertson, Inc.
3890 Symmes Road
Hamilton, OH 45015
ph 513-860-3445 fx 513-860-4744
www.fischer-robertson.com

The Automag Skid is a self-contained, free-standing magnetic filtration system providing uninterrupted 24/7 magnetic filtration. The skid can be used in-line or, with the optional integral pump, off-line.

A patent-pending Automag self-purging magnetic filter* removes magnetic and para-magnetic contamination, down to sub-micron size, from coolants and lubricants. The filter holds the contamination until it is released during the automated 'purge' process. This briefly diverts the filter's purged output so that fluid carries all the contamination to the buffer tank.

The buffer tank feeds the contaminated fluid to the high-intensity coolant roller.

The magnetic coolant roller removes the contamination from the fluid, putting clean fluid back into circulation. The contamination is extracted in a form ready for disposal or recycling.

* Units can be supplied with a single filter, or double filters for duplex operation.

Cut costs

- Eliminate disposal costs
- Extend the life of your fluids
- Extend the life of other filters

Improve quality

- Increase workpiece accuracy
- Improve workpiece finish

Reduce maintenance

- Reduce wear and tear of machinery

Applications

- Grinding
- Honing
- Milling
- Fine finishing

HOW IT WORKS

Contaminated fluid enters the inlet port where it is dispersed into the first filtration chamber. The fluid passes around the high-intensity 'rare earth' magnetic cores where contamination particles are removed. The fluid is slowed and enters the second filtration chamber where it receives further filtration.

Contamination remains attached to the stainless steel sleeves of the cores. The filtered fluid exits through the outlet port.

The purging process is fully automated. The cores are raised from the sleeves and the purge valve is switched. Fluid is pumped through the filter, washing the contamination from the stainless steel sleeves and carrying it into the buffer tank.

The fluid is then slowed and passed onto the coolant roller. This purged fluid is highly contaminated. The flow rate and high magnetic strength of the roller ensure that contamination removal is extremely efficient.

The clean fluid is then re-circulated; the contamination is scraped from the roller and collected for disposal or recycling.

In operation

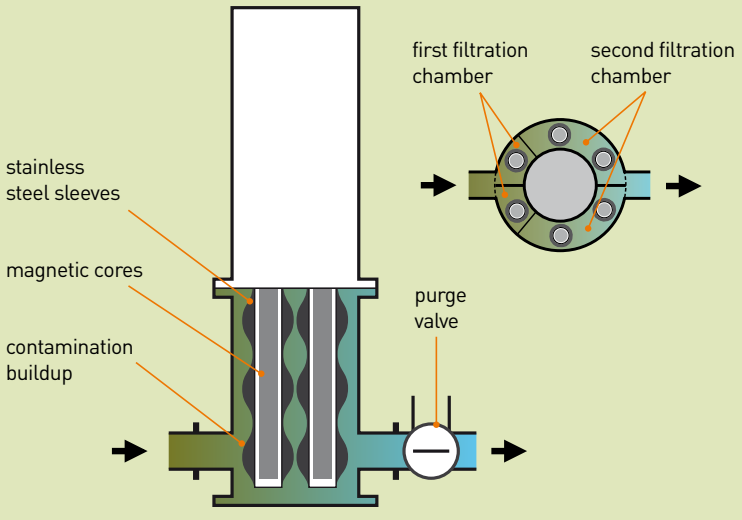

Contamination is attracted to the sleeve of the cores. Cleaned fluid is circulated into the process.

Fischer-Robertson, Inc.
3890 Symmes Road
Hamilton, OH 45015
ph 513-860-3445 fx 513-860-4744
www.fischer-robertson.com

Automag magnetic filter
2-stage magnetic filtration, removes contamination down to sub-micron size. Automated cleaning process

Buffer tank
Provides a holding point for purged fluid and contamination before it is fed through the magnetic coolant roller

Magnetic coolant roller
Separates contamination from the 'purge fluid'. Clean fluid is fed back into the system. Contamination is removed as semi-dry cake which can then be recycled

Diverter valve
Automatically switched during the 'purge' process to send purged fluid and contamination to the buffer tank

Purging

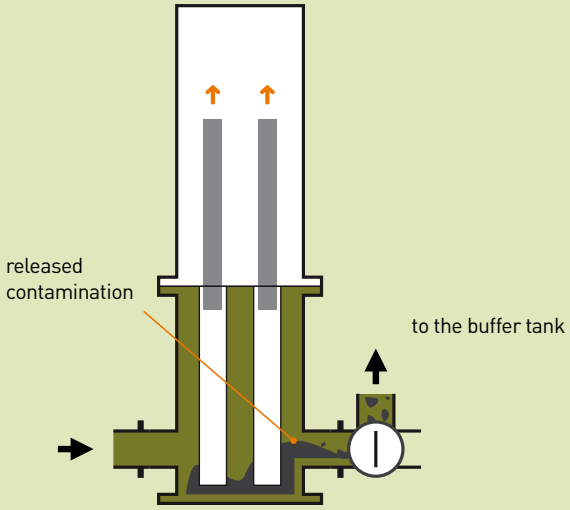

Cleaning cycle: the magnetic cores are lifted from the sleeves and the purge valve is opened. Contamination is released and washed up into the buffer tank.

Fluid recovery

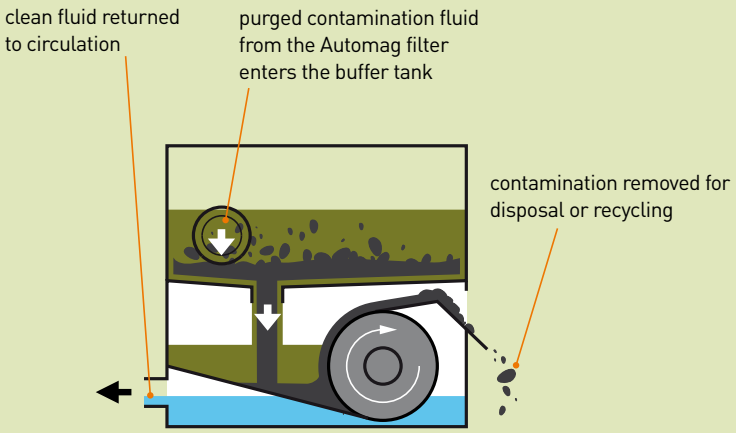

Contaminated fluid is fed from the buffer tank onto the magnetic coolant roller. Contamination is attracted to the rotating roller, leaving clean fluid to be re-circulated. Contamination is removed from the roller by a scraper, ready for collection.

Fischer-Robertson, Inc.
3890 Symmes Road
Hamilton, OH 45015
ph 513-860-3445 fx 513-860-4744
www.fischer-robertson.com

Product data

Self contained filtration and fluid recovery system for higher flow, higher contamination applications. 24/7 automated operation.

Automatic self-cleaning filter (air operated)
Magnetic coolant roller for full recovery of fluid used in cleaning process
Temp. range: 41°F / 5°C to 158°F / 70°C (filter unit)

Automag filter unit	Number of cores	Maximum flow rate		Contam. capacity	Max. operating pressure
		US gallons/min	Litres/min.	lbs / kgs	psi / bar
AMC	8	52	200	5 / 2.5	145 / 10
AM6	6	118	450	15 / 7	145 / 10
AM12	12	237	900	30 / 14	145 / 10

Dimensions inches / mm

Product number	W	L	H	D1	D2	D3	Flanges
AMCS1	35 / 900	35 / 900	67 / 1700	2 / 50	1½ / 38	1½ / 38	ANSI / PN16
AM6S1	38 / 1000	47 / 1200	57 / 1300	3 / 75	2 / 50	2 / 50	ANSI / PN16
AM12S1	47 / 1200	51 / 1400	74 / 1400	3 / 75	3 / 75	3 / 75	ANSI / PN16

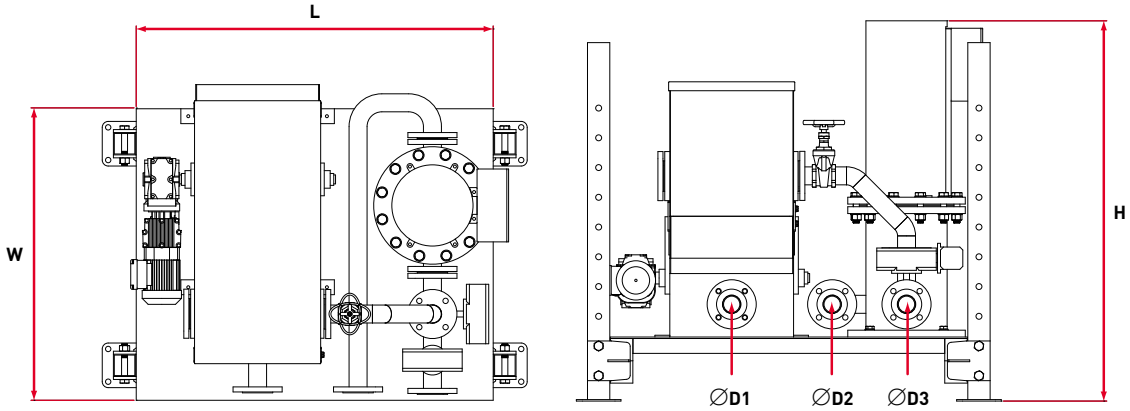

Diagram shows inline unit without integral pump

Other magnetic filters

Micromag

Compact, general purpose magnetic filter. Most machining applications.

Filtramag

Larger filter for higher contamination capacity and flow rates. Precision grinding machines and fine finishing operations. Arduous environments. Inline applications.

Automag

Automated self-cleaning filter requiring no user intervention. In-line or off-line applications. Purging actuated by machine control.

Fischer-Robertson, Inc.
3890 Symmes Road
Hamilton, OH 45015
ph 513-860-3445 fx 513-860-4744
www.fischer-robertson.com

BoilerMag XT®

Industrial Heating System Protection

Installation and Servicing Instructions

BOILERMAG 3 YEAR WARRANTY

BoilerMagXT Heating & Cooling System Filter

Thank you for choosing BoilerMagXT, please follow the instructions carefully to ensure that this BoilerMagXT magnetic filtration system is fitted and maintained correctly.

By completing and returning the guarantee card in the pack you qualify for a 3 year warranty against manufacturing defects. Failure to follow these instructions will invalidate the warranty.

BoilerMagXT is a magnetic filtration system for heating systems in larger premises such as industrial, commercial and municipal buildings. For other applications always consult the manufacturer before installing.

This product contains strong magnets. Care and attention should be taken at all times during installation and servicing. Do not place the magnetic cores on any ferrous surfaces or near ferrous objects.

Suitable personal protective equipment should be used during all installation and servicing.

PPE

BoilerMagXT must be installed by a qualified person in accordance with all relevant current regulations.

Fischer-Robertson, Inc.
3890 Symmes Road
Hamilton, OH 45015
ph 513-860-3445 fx 513-860-4744
www.fischer-robertson.com

Guide to Installation

Ensure the heating system is isolated prior to carrying out installation or maintenance work.

Where to Install

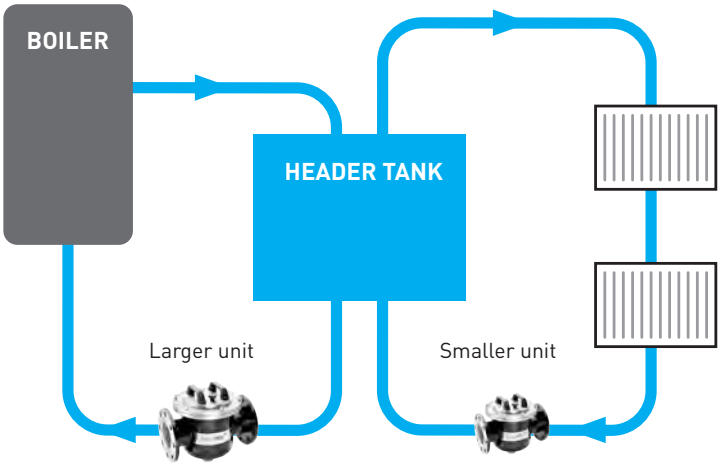

BoilerMagXT is typically installed on the return circuit as close to the boiler as possible. On larger systems, such as the one shown, smaller BoilerMagXT units may be installed elsewhere to give extra protection for radiators and pipework.

Please also ensure that the BoilerMagXT is located in a position which gives adequate access above to lift out the magnets during servicing and maintenance. Also access is required to the underneath of the unit to connect a hose or hold a bucket during draining.

Venting Options

The BoilerMagXT unit is fitted with a manual vent, however, an additional automatic vent has been packaged along with unit separately. The auto-vent will automatically release the trapped air maintaining heating efficiency. This gives you the choice to fit the auto-vent unit when the system temperature and pressure is within the lower limits of **10 bar and 110 C** respectively.

Please find enclosed the installation instructions for the Automatic Vent.

Fischer-Robertson, Inc.
3890 Symmes Road
Hamilton, OH 45015
ph 513-860-3445 fx 513-860-4744
www.fischer-robertson.com

Installing BoilerMagXT

1. Identify a suitable location (see 'Where to Install' p3).
2. Ensure enough clearance to carry out cleaning as the rods must be lifted out of the unit to clean. See dimensions in column B in the table below.
3. Mark and then cut out the correct length of pipe section to be removed to accommodate the BoilerMagXT unit and isolation valves. Ensure the cut is level and burr free. (Isolation valves are not included in the BoilerMagXT pack.)
4. Install appropriate isolation valves to the pipework and fit the valves to the two PN16 flanges (see below for flange dimensions).
5. Position the BoilerMagXT in place then align and secure the fittings to connect the unit to the valves.
6. Open the isolation valves and turn on the heating system
7. Complete the BoilerMagXT warranty card and return.
8. Run the heating system at normal operating temperature and check installation integrity.

Installation details

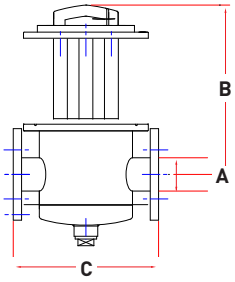

Part No.	Inlet / outlet ∅A	B	Flange spacing C
BMXT150/2	2″	305	280
BMXT200/3	3″	390	360
BMXT200/4	4″	390	380
BMXT300/6	6″	360	490
BMXT300/8	8"	400	525
BMXT400/10	10"	770	760
BMXT400/12	12"	820	760

all dimensions in mm unless stated

Flange details

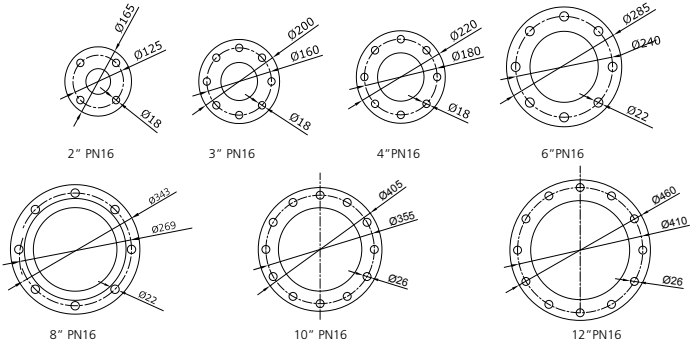

Flange details for 2", 3", 4", 6",8",10"& 12" Flanges to PN16 layout

Fischer-Robertson, Inc.
3890 Symmes Road
Hamilton, OH 45015
ph 513-860-3445 fx 513-860-4744
www.fischer-robertson.com

Servicing & Maintenance Instructions

Cleaning and servicing must only be carried out by a qualified person in accordance with all relevant current regulations.

To maintain optimum efficiency we recommend cleaning annually. However when a BoilerMagXT is fitted to an existing heating system we recommend more regular checks as it is likely there will be a large build-up of ferrous oxide (black sludge) to clear out.

To service and maintain BoilerMagXT follow the instructions below:

1

Isolate the heating system and close the isolation valves on either side of the BoilerMagXT unit.

2

Remove the black tricone positioned on the lid.Lift out the magnetic cores using the handle on top of the unit. *Warning see below*. Be careful not to place the cores on or near ferrous items.

3

Either place a bucket underneath or connect a hose to the 1 ¼ " drain valve on the underside of the BoilerMagXT. Remove the drain plug and open the drain valve.

4

Partially open the inlet isolation valve and allow the contents to drain through the drain valve. When the draining water runs clear turn off the inlet isolation valve and allow the remaining contents to drain.

⚠ For 8",10" and 12" BMXT units, the weight may exceed safe single person lifting limits. Please check and if required do as 2 persons or alternatively as a mechanical lift.

Servicing & Maintenance Instructions

5

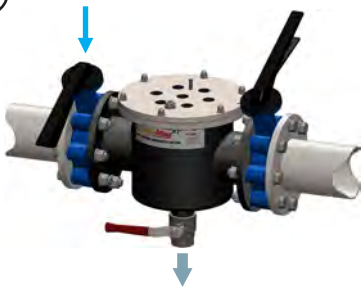

Close the drain valve and replace the plug.

6

Replace the magnetic core and hand tighten the black tricone to retain.

7

Re-open both isolation valves. If required open the vent shown on the top of the unit to release any trapped air*.

8

*Automatic Vent option also available

Fischer-Robertson, Inc.
3890 Symmes Road
Hamilton, OH 45015
ph 513-860-3445 fx 513-860-4744
www.fischer-robertson.com

Product data

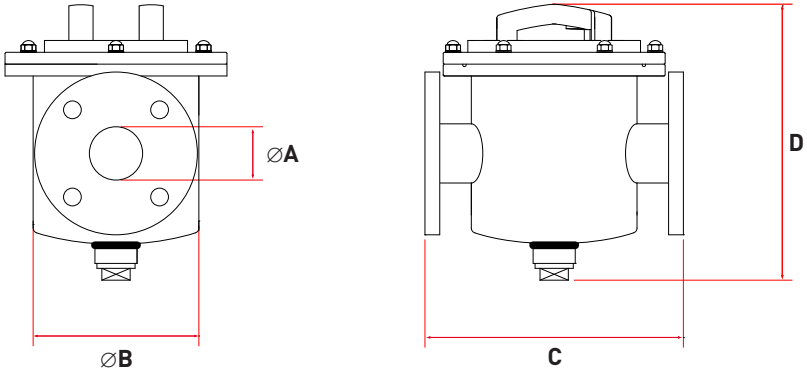

Part No.	Inlet / Outlet Dia. A	Filter Dia. B	Flange spacing C	Height D	No. magnetic rods	Flow rate cubic metres/ hour	Flange type
BMXT150/2	2"	170mm	280mm	280mm	5	20	PN16
BMXT200/3	3"	220mm	360mm	335mm	7	55	PN16
BMXT200/4	4"	220mm	380mm	335mm	7	85	PN16
BMXT300/6	6"	325mm	490mm	420mm	9	110	PN16
BMXT300/8	8"	325mm	525mm	460mm	9	140	PN16
BMXT400/10	10"	406mm	760mm	600mm	16	220	PN16
BMXT400/12	12"	406mm	760mm	600mm	16	310	PN16

Performance

Magnetic performance	9,000 Gauss high strength
Performance reading	On tube surface
Magnetic material	Rare earth neodymium iron boron (NdFeB)
Magnet grade	N42SH – insepcted and confirmed by hysterograph prior to use
Temperature	5° to 150°C (Auto-vent rated to max temperature of 110°C)
Operating pressure	12 bar (Auto-vent rated to operating pressure of 10 bar)
Drain Valve	$1\frac{1}{4}$"

Materials

Housing	304 grade stainless steel
Magnet tube assembly	316 grade stainless steel – aerospace quality
Surface finish	Internal - bead blast External - powder coated, black
Sealing	Viton o-ring, brown

Options

High temperature samarium cobalt magnetic material +250° C

Warranty

3 years

Fischer-Robertson, Inc.
3890 Symmes Road
Hamilton, OH 45015
ph 513-860-3445 fx 513-860-4744
www.fischer-robertson.com

See our full range of system treatment products

BoilerMag® Dual Flow System Filter

(22mm & 28mm connections)

BM3 BM1

BoilerMag XL® Dual Flow System Filter

(1½" connections)

BoilerMag Electrolytic Scale Reducer

Fischer-Robertson, Inc.
3890 Symmes Road
Hamilton, OH 45015
ph 513-860-3445 fx 513-860-4744
www.fischer-robertson.com

Fischer-Robertson, Inc.
3890 Symmes Road
Hamilton, OH 45015
ph 513-860-3445 fx 513-860-4744
www.fischer-robertson.com

Operating Instructions

Boilermag XL Filter

High Intensity Magnetic Separator

20130531

Fischer-Robertson, Inc.
3890 Symmes Road
Hamilton, OH 45015
ph 513-860-3445 fx 513-860-4744
www.fischer-robertson.com

Table of contents

1 Introduction 3
1.1 Range of application 3
1.2 Used symbols 3
1.3 Legal basis 3
1.4 Overview 4
2 Technical data 6
2.1 Performance data 6
2.2 Noise data sheet 6
2.3 Dimensions 7
3 Design and method of operation 7
3.1 Method of operation 7
3.2 Constructional design 7
4 Safety 8
4.1 Intended use 8
4.2 General preventive measures 8
4.3 Dangers during neglect of the safety notes 8
4.4 Safety notes for operation and maintenance 8
4.5 Notes on residual risks 9
4.6 Consequences with arbitrary change 9
4.7 Prohibited operation 9
5 Installation / Operation 9
5.1 Mechanical installation 9
5.2 Connections 10
5.3 Setting of the operating parameter 10
5.4 Cleaning 10
6 Maintenance 14
6.1 General notes 14
7 Service 14
7.1 Service address 14
8 Shipping, preservation, waste disposal, transport, storage 15
8.1 Shipping, preservation, waste disposal 15
8.2 Transport 16
8.3 Storage 16

Fischer-Robertson, Inc.
3890 Symmes Road
Hamilton, OH 45015
ph 513-860-3445 fx 513-860-4744
www.fischer-robertson.com

1 Introduction

1.1 Range of application

The Boilermag XL follows on from the standard Boilermag family and has all the same incredible benefits. The unit was developed to suit larger domestic boiler systems and small commercial systems.

Boilermag XL is designed to be installed on the return line to the boiler and will ensure that even sub micron magnetic and paramagnetic particles are removed before they can cause any expensive damage.

For further information relating to the standard benefits and operation please refer to the downloadable Boilermag brochure on our website – http://www.boilermag.com/.

The filter is not to be used with a corrosive or aggressive medium.

Pressure rating – Standard filter is designed and tested to operate at 6 bar max line pressure.

1.2 Used symbols

= Important notes

= Danger notes

= Safety notes

1.3 Legal basis

This device corresponds to the machine guideline 206/42/EC.

Fischer-Robertson, Inc.
3890 Symmes Road
Hamilton, OH 45015
ph 513-860-3445 fx 513-860-4744
www.fischer-robertson.com

1.4 Overview of Boilermag XL

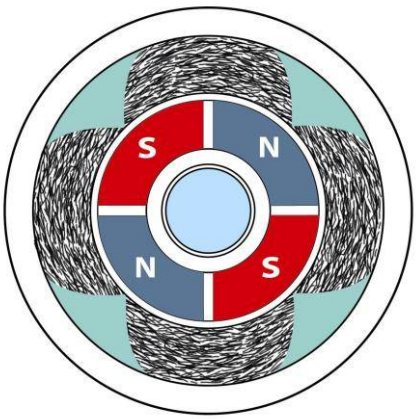

Details of magnetic circuits showing open flow path through bowl even when core is fully contaminated.

Filter Body

Magnet Core Assembly

Fischer-Robertson, Inc.
3890 Symmes Road
Hamilton, OH 45015
ph 513-860-3445 fx 513-860-4744
www.fischer-robertson.com

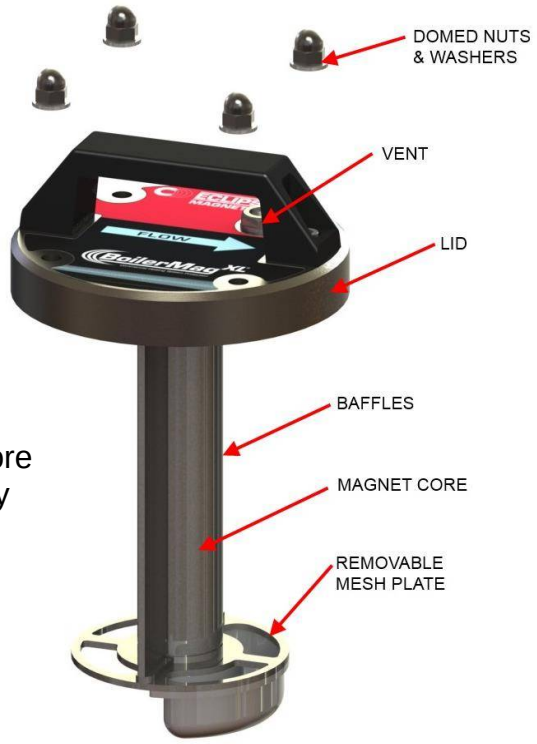

Magnet Core Assembly

Filter Body

Fischer-Robertson, Inc.
3890 Symmes Road
Hamilton, OH 45015
ph 513-860-3445 fx 513-860-4744
www.fischer-robertson.com

2 Technical data

2.1 Performance data

Design Temperature:	5 to 150°C
Maximum Operating Pressure:	6 bar
Vessel Construction	Stainless steel
Magnetic Material:	NdFeB N42SH
Port size:	1.1/2” BSP
Port size: Optional	1.1/2” NPT
Contamination capacity:	1kg
Vessel Volume	1.4 Litres
Vessel Weight	5.4 kg

2.2 Noise data sheet

Sound pressure level, measurement according to DIN 45635:

Idling	< 70 dB(A)
Conveying	< 70 dB(A)

Fischer-Robertson, Inc.
3890 Symmes Road
Hamilton, OH 45015
ph 513-860-3445 fx 513-860-4744
www.fischer-robertson.com

2.3 Dimensions

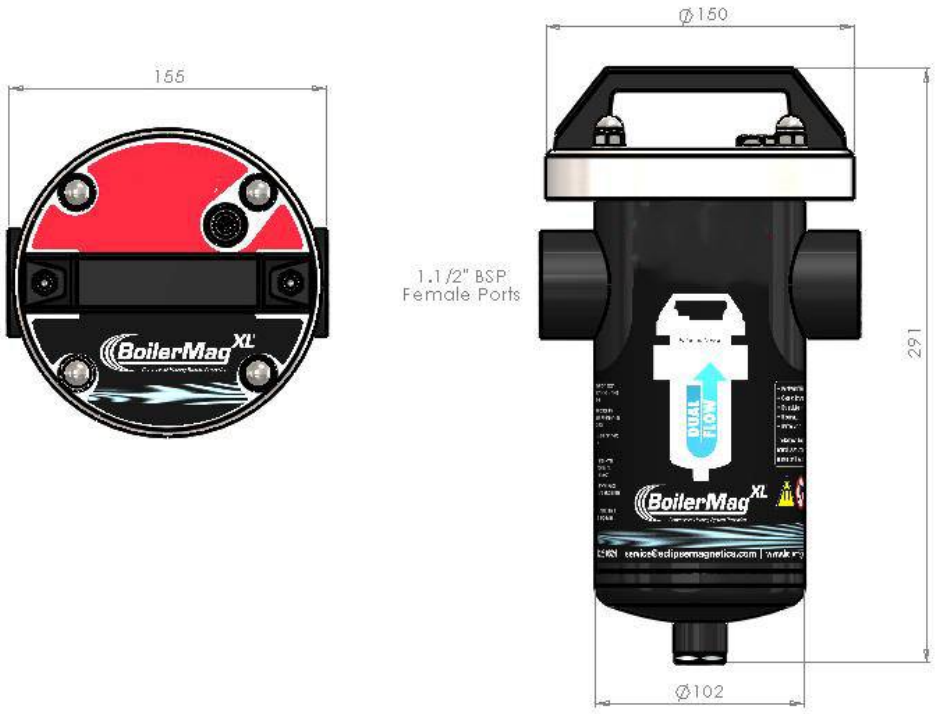

3 Design and method of operation

3.1 Method of operation

The single magnetic rod is integrated in a stainless steel housing and forms one unit e.g. fitted in series with the pipe-line. The flow is arranged in such a manner that the material that is to be cleaned is well distributed and comes intensively into contact with the magnetic field.

3.2 Constructional design

- Stainless Steel Construction
- Viton O Ring
- 1/2” Drain Plug
- High Intensity magnetic rod

Fischer-Robertson, Inc.
3890 Symmes Road
Hamilton, OH 45015
ph 513-860-3445 fx 513-860-4744
www.fischer-robertson.com

4 Safety

4.1 Intended use

The inline liquid filter is designed for installation into pressurised pipe lines working at up to 6 bar. All pipeline connections are to be installed accurately and sealed to prevent the loss of pressure/product. The lid seal is to be maintained in a good condition.
To ensure that the supplied magnets maintain their high level of performance, attention must be paid to the following conditions:

1. NO temperatures above the specific operating temperature

2. NO oscillating vibrations

3. NO impacts

4. NO strong external flux fields

5. Pay attention to the cleaning and maintenance of the system

4.2 General preventive measures

The rod is constructed with strong magnets. The handling of ferrous tools (e.g. with maintenance or cleaning) etc. can cause risk of injury for the personnel due to the magnetic attraction.
Special measures regarding the presence of ferrous items have to be considered when handling magnetic material.

4.3 Dangers during neglect of the safety notes

Using this equipment in a manner not intended can present safety hazards.

4.4 Safety notes for operation and maintenance

Maintenance work is to be executed only by qualified personnel.
With work on pneumatic, hydraulic, pressurised or electrical services the supply lines are to be isolated prior to any cleaning or maintenance actions.

Prior to any maintenance work being carried out, the process, equipment used and personnel must be risk assessed and deemed suitable to conduct that task. All work is to be carried out in accordance with local and legislative regulations.

WARNING! This system incorporates strong permanent magnetic materials. Please pay attention to the safety notes in order to avoid personal injury or material-damage:

- Operators fitted with heart pace-maker's shall not come within 1m of the equipment.
- Oppositional poles of magnets attract each other with high clamping forces.
- Do not use steel/iron tools or other ferrous parts in the flux field of the system.
- Data carriers, credit cards, computer drives etc can be erased by the influence of the magnetic field. Keep electronic and sensitive mechanical units (i. e. watches) away from the magnet.
- Please contact our service department before welding or drilling works on the unit.

Fischer-Robertson, Inc.
3890 Symmes Road
Hamilton, OH 45015
ph 513-860-3445 fx 513-860-4744
www.fischer-robertson.com

4.5 Notes on residual risks

Vent any trapped pressure from the process line prior to working on the unit.

4.6 Consequences with arbitrary change

With arbitrary change or repairs all warranties and assertions delivered by the manufacturer become void.
Only genuine o.e.m. parts are to be used in any repair to maintain the manufacturer's warranty.

4.7 Prohibited operation

The unit must not be subjected to any high external loads or induced vibrations.

5 Installation / Operation

5.1 Mechanical installation

For optimum performance the unit is to be installed as follows:

- Before installation ensure that all supplies are isolated.
- Boilermag XL is to be installed vertically with the bowl pointing downwards; this allows fluid to drain out of the bowl prior to cleaning.
- It is recommended that Boilermag XL is installed on the return line of the heating system just prior to the boiler.
- If the Boilermag XL is to be installed using flexible hoses, please ensure the unit is suitably supported.
- The function of the magnetic core 'cartridge' is direction specific. When installing please ensure the mesh segment is on the outlet side of the pipework.
- If the system is subject to pressure surges install a pressure regulator set at 6bar prior to the Boilermag XL.

    - Seal mating piping joints effectively to reduce pressure/product loss
    - Erect signage in the close proximity warning of hazards presented by permanent magnets, ie pace makers and the dangers of opening the magnet housing whilst product is flowing.
    - Install in location with adequate free space to withdraw magnet cartridge from vessel for cleaning
    - Consider manual handling regulations when deciding installation location

Fischer-Robertson, Inc.
3890 Symmes Road
Hamilton, OH 45015
ph 513-860-3445 fx 513-860-4744
www.fischer-robertson.com

5.2 Connections

- No external power sources required for this product

5.3 Setting of the operating parameter

- No customer adjustment available to this unit

5.4 Cleaning

If operated and cleaned correctly your Boilermag XL will give many years of trouble free filtration with no consumable parts. The filter will remove even the smallest particle due to its high magnetic filed strength. Cleaning should take no more than a few minutes.

- Turn off the heating system
- Isolate the filter from the system flow
- Using Screwdriver, open the air vent in the top of the filter
- Remove the Drain Plug using Tool provided.
- Fully drain contents into a suitable container.
- Using the Tool provided, unscrew and remove M8 Domed nuts / Washers
- Lift the Magnet Cartridge Assembly out of the body and move it away to a cleaning station.
- Non-magnetic contamination will remain in the bottom of the bowl and requires rinsing out
- Remove the Quick release Mesh Plate from the Magnet Core Assembly and rinse clean
- Using the cleaning tool provided, scrape the bulk of the ferrous contamination off the magnet core and into a suitable container – it is not essential to remove all of the collected contamination
- Refit the Mesh Plate to the Magnet Core Assembly
- Re-assemble the Magnet Cartridge Assembly into the body
- Refit and tighten M8 Domed Nuts / Washer
- Refit the Drain Plug
- Close vent
- Remove the Filter isolation
- Carefully open the air vent to release any trapped air
- Close Vent
- Switch on the heating system

Do not use corrosive substances to clean the equipment

Fischer-Robertson, Inc.
3890 Symmes Road
Hamilton, OH 45015
ph 513-860-3445 fx 513-860-4744
www.fischer-robertson.com

Dismantling Instructions

Loosen Drain Plug
using Tool Provided

Remove Drain Plug

Remove Core from Body

Fischer-Robertson, Inc.
3890 Symmes Road
Hamilton, OH 45015
ph 513-860-3445 fx 513-860-4744
www.fischer-robertson.com

Dismantling & Cleaning Mesh

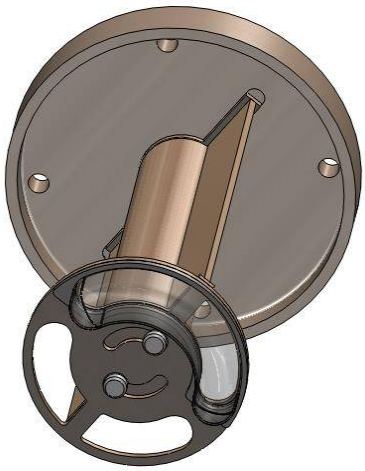

Rotate Mesh Plate
Counter Clockwise

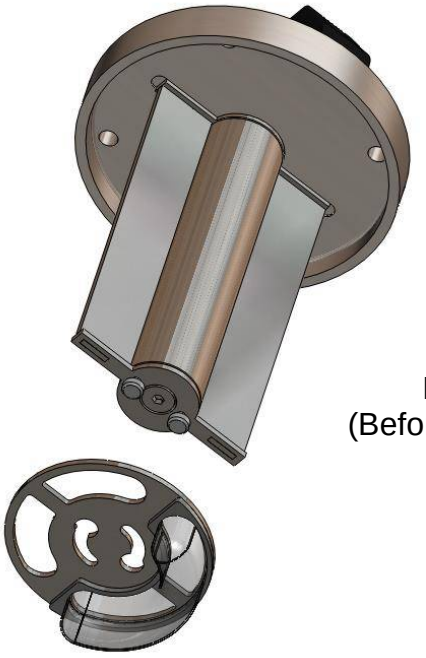

Remove Mesh Plate
(Before cleaning Magnet Core)

Fischer-Robertson, Inc.
3890 Symmes Road
Hamilton, OH 45015
ph 513-860-3445 fx 513-860-4744
www.fischer-robertson.com

Cleaning Magnet Core Instructions

Scrape Contamination in a downwards movement using Tool Provided

Fischer-Robertson, Inc.
3890 Symmes Road
Hamilton, OH 45015
ph 513-860-3445 fx 513-860-4744
www.fischer-robertson.com

6 Maintenance

6.1 General notes

- Keep the system clean, especially the magnetic rods
- Regular check of the seal for defects
- Regular check of the housing and the tube surface for wear
- Do not clean with aggressive cleaner!
- Do not clean the rod with water!

Moisture on the bar magnets leads to corrosion and possible damage to the system. It is strongly recommended that regular inspections are carried out to check for moisture and that appropriate action is taken to ensure the bar magnets are dried thoroughly.

Fischer-Robertson, Inc.
3890 Symmes Road
Hamilton, OH 45015
ph 513-860-3445 fx 513-860-4744
www.fischer-robertson.com

8 Shipping, preservation, waste disposal, transport, storage

8.1 Shipping, preservation, waste disposal

1. Select a suitable packing depending upon type and range of the transmission (export, sea air freight, truck national, internationally). The packing must be selected in such a way that under normal transport prerequisites no damage to the commodity can occur.

2. National transmissions are packed exclusively truck-transportable depending upon scope, weight and condition of the commodity in cardboard, cardboard pallets etc.. When filling and protection material in the packing strengthened cardboard, cardboard, air cushion foil and shred paper used.
On the packing outside warning labels are additional to attach, e.g.: 'Caution! High-energy magnet. Do not throw'. The packing is locked with tape and with weights starting from 50 kg additionally with safety tape.

2a. International truck transmissions are packed accordingly to point 2, larger and heavier transmissions depending upon protection neediness also export-fairly in wooden boxes. To corrosion protection in the packing is to be paid attention.
Easily corrosive sections are to be packed up before the packing in oiled paper or corrosion protection foil. It is to be made certain that the packed sections in the packing become secured against slipping.

2b. International air fright transmissions are to be packed accordingly in wooden boxes or in export packaging. You have to ensure that the maximum values of magnetic field strength are not exceeded, when sending by air-freight (IATA Dangerous Medium Prescript “Cap. 3.9.1.2. Magnetized Material”; ICAO Instructions “Packing Instruction 902”). On charge protection within the packing is absolutely to note (this can be achieved by screw connections or keying). Corrosion protection with susceptible sections is to attach (oiled paper, protective plastic film, corrosion spray etc.).

2c. Seaworthy export supplies are to be packed in seaworthy export crates. The crates are made particularly and accurate to size, relating to orders by drawer operations. Crates are to be laid out with oiled paper corrosion resistant and seawater. Commodity is to be protected from corrosion additionally with spray or protective plastic film.
It is to be made certain that the transmissions in the crate become secured against slipping (this can by woods, wood slats and additional screw connections takes place). After the packing the sea-crates are to be nailed correctly or bolted. The sea-crates with safety tape become additional secured.

With the loading it is to be guaranteed that the transmissions become correctly and surely stowed away and secured. The transfer and loading correct of the transmission on means of transport are by the carrier on the waybill to certify on the load list, etc..

3. Waste disposal: Observe the national waste disposal regulations.

Fischer-Robertson, Inc.
3890 Symmes Road
Hamilton, OH 45015
ph 513-860-3445 fx 513-860-4744
www.fischer-robertson.com

8.2 Transport

- In order to avoid injury or damage to the unit it must be handled properly. In addition to following the instructions below, general health and safety good practice and specific accident prevention guidelines should be observed.
- For correct handling and storage comply with the following symbols:

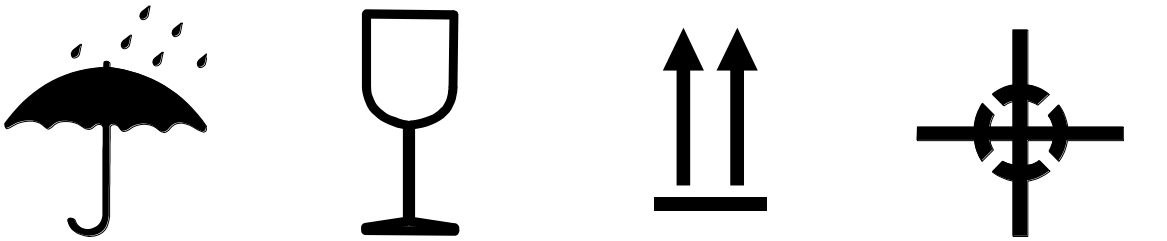

Protect against moisture | Careful: glass | Up | Centre of gravity

- Do not compress the side walls of the unit or any attached parts by pulling obliquely on ropes or chains.
- Only remove handling safeguards once all installation work has been completed.
- When handling in a loading area make sure the unit cannot topple over or slip.
- Damage caused during transportation must always be reported to the manufacturer.

8.3 Storage

- If possible the unit should be stored in a closed room until final installation.
- If the unit is stored in the open it must be covered over with tarpaulins and open underneath, to allow condensation to drain off.
- If the unit has been packed for transportation by sea the packaging must not be damaged or opened during transit and storage.
- For correct storage comply with all storage and handling symbols:

Protect against moisture | Careful: glass | Up

Liquid Filter Magnet

High Intensity – Rare Earth

Fischer-Robertson, Inc.
3890 Symmes Road
Hamilton, OH 45015
ph 513-860-3445 fx 513-860-4744
www.fischer-robertson.com

Datasheet No. 518

Standard Design

Bespoke Design

The high intensity Liquid Filter magnetic separator has been designed to operate in pressurised transfer lines to provide protection against ferrous and para-magnetic contamination.

The housing comprises a vessel, magnetic lid assembly and band clamp, which secures the unit together. The filter is available in two versions, single wall and double wall (jacketed for heated pipelines).

The filter can be used in any line that processes liquids at all viscosity levels and can be installed at any angle from vertical to horizontal. A common installation location is tanker loading and discharge to inspect outgoing and incoming materials.

The filter can be supplied to suit various processing volumes, pressures, temperatures and specifications.

Cleaning

The filter uses the 'Easy Clean' system.
To clean, simply release the quick release band clamp, remove the contaminated cartridge from the housing and remove the magnetic cores from the tube assembly. All attracted contamination can be easily removed allowing for inspection or further analysis.

Suitable Products

Chocolate, molasses, jam, syrup, juice, sauce, pastes, soup, pickles, spreads, beverages etc.

Suitable Locations

All, vertical, horizontal or angled.

Benefits

- Easy to clean
- Removes sub-micron sized contaminants
- Meet audit requirements
- Rare earth 9.000 Gauss
- No consumables
- No pressure drop

Category

Secondary protection - fines.

Fischer-Robertson, Inc.
3890 Symmes Road
Hamilton, OH 45015
ph 513-860-3445 fx 513-860-4744
www.fischer-robertson.com

Technical Data

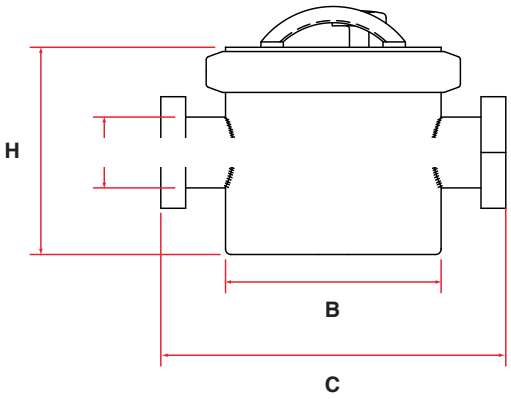

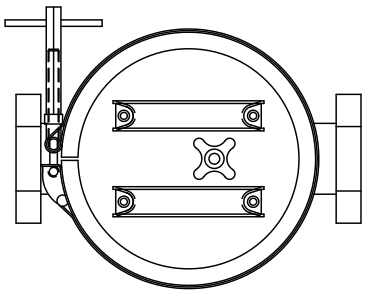

Product Information

Part Number	Spout dia. A mm	Dia. B mm	C mm	H mm	No. Rods	Weight kg
Single wall						
ILF200 / 50	50	200	350	200	7	22
ILF200 / 75	75	200	350	200	7	22
ILF300 / 50	50	300	450	300	9	36
ILF300 / 75	75	300	450	300	9	36
ILF300 / 100	100	300	450	300	9	36
Jacketed						
ILF200 / 50 / J	50	200	350	200	7	22
ILF200 / 75 / J	75	200	350	200	7	22
ILF300 / 50 / J	50	300	450	300	9	36
ILF300 / 75 / J	75	300	450	300	9	36
ILF300 / 100 / J	100	300	450	300	9	36

Performance

Magnetic performance	9,000 Gauss high strength
Performance reading	On tube surface
Magnetic material	Rare earth neodymium iron boron
Magnet grade	N45 – Inspected and confirmed via hysterograph prior to use
Temperature	-20°C / +90°C
Pressure	+ / - 6 Bar

Materials

Housing	316 grade stainless steel
Tubing	316 grade stainless steel – aerospace quality
Other Parts	316 grade stainless steel
Surface finish	Brushed internally / externally to 1.2µm
Sealing	Silicon rubber O-ring, brown
Band Clamp	304 grade stainless steel

Options

- Stainless steel handles
- High temperature samarium cobalt magnetic material +250°C
- 11,000 Gauss fixed design
- Overpressure to 30 Bar
- 304 grade stainless steel
- Pharmaceutical specification
- ATEX certified
- Flanged to suit
- Safety relay switch

Single Row Housed Grid Easy Clean Magnet

High Intensity – Rare Earth

Fischer-Robertson, Inc.
3890 Symmes Road
Hamilton, OH 45015
ph 513-860-3445 fx 513-860-4744
www.fischer-robertson.com

Datasheet No. 510

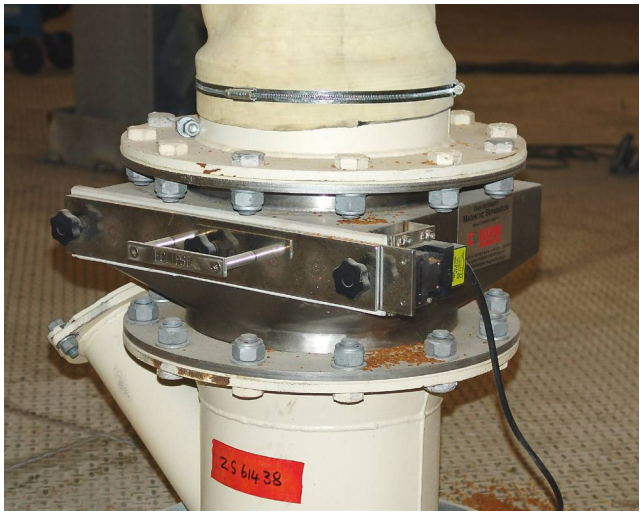

High intensity magnetic Easy Clean
Housed Grids offer unsurpassed levels of contamination removal, removing sub-micron ferrous and para-magnetic contamination from the most demanding and arduous of process environments.

The unit contains one high intensity Easy Clean Magnetic Grid. The grid is secured into the housing by tri-cone locking nuts which ensure even pressure is generated around the food grade seal.

Units can be supplied with quick release toggle clamps if cleaning time is to be kept to a minimum. Alternatively, consider the Auto-Shuttle unit, which requires no intervention. For those applications were ultimate levels of removal are required, a double row system is available (datasheet 511).

It is common to have numerous units installed throughout a processing facility to ensure contamination is removed at source of generation.

All dry powders and granular type materials can be processed through the unit. Electrical safety interlocks can be fitted to the grid to stop the process should it be accidentally opened.

Cleaning

This unit uses the 'Easy Clean' system.
This design allows all attracted contamination to be easily and quickly collected for further inspection or analysis.

When the unit requires cleaning, simply remove the outer grid securing tri-cone locking nuts and remove the grid from the housing. Remove the central tri-cone locking nut and separate the grid assembly allowing all attracted contamination to simply fall away.

Suitable Products

Dry powders and granulates.

Suitable Locations

Inlet / outlet points, pre- / post-silo and machinery points.

Benefits

- Easy to clean
- High collection capacity
- Reduces 'spark' risk
- Removes sub-micron sized contamination
- Meet audit requirements
- Rare earth 7,000, 9,000 Gauss

Fischer-Robertson, Inc.
3890 Symmes Road
Hamilton, OH 45015
ph 513-860-3445 fx 513-860-4744
www.fischer-robertson.com

Technical Data

Round

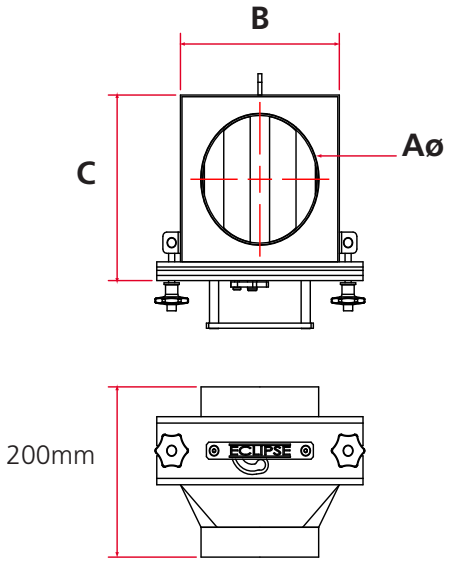

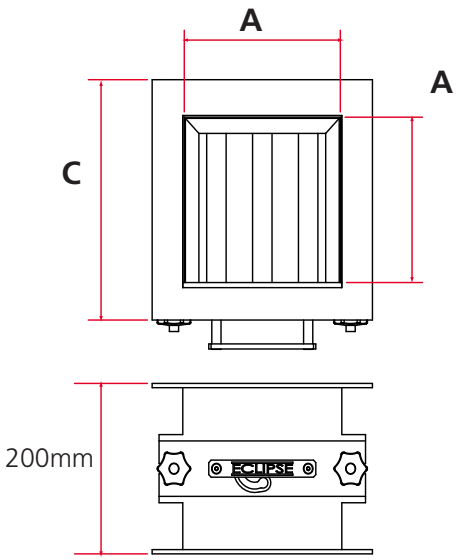

Product Information

Part Number	⌀A mm	B mm	C mm	No. of Rods	Weight kg
Round					
ECHS100	100	158	168	2	7
ECHS150	150	208	218	3	9
ECHS200	200	258	268	4	11
ECHS250	250	308	318	5	23
ECHS300	300	358	368	6	27
ECHS350	350	408	418	7	32
ECHS400	400	460	470	8	41
Square					
ECHS1010	100	100	180	2	6
ECHS1515	150	150	230	2	8
ECHS2020	200	200	280	3	9
ECHS2525	250	250	330	4	16
ECHS3030	300	300	380	5	20
ECHS3535	350	350	430	6	25
ECHS4040	400	400	480	7	29

Performance

Magnetic performance	*7,000 Gauss - standard strength 9,000 Gauss - high strength
Performance reading	On tube surface
Magnetic material	Rare earth neodymium iron boron
Magnet grade	N45 – Inspected and confirmed via hysterograph prior to use
Temperature	-20°C / +90°C
Pressure	+ / - 0.2 Bar

Materials

Housing	316 grade stainless steel
Other Parts	316 grade stainless steel
Surface finish	Brushed internally / externally to 1.2µm
Sealing	Self adhered white foam
Tri-cone Nuts	Brass and moulded plastic

Options

- Stainless steel toggle clamps
- Overpressure to + / - 10 Bar
- 500mm (Special sizes on request)
- 304 grade stainless steel
- Pharmaceutical specification
- ATEX certified
- Flanged to suit
- Safety relay switches
- Metal detectable silicon rubber seal – dark blue, FDA approved
- Grid support track system
- High temperature samarium cobalt magnetic material, +250°C

Double Row Housed Grid Easy Clean Magnet

High Intensity – Rare Earth

Fischer-Robertson, Inc.
3890 Symmes Road
Hamilton, OH 45015
ph 513-860-3445 fx 513-860-4744
www.fischer-robertson.com

Datasheet No. 511

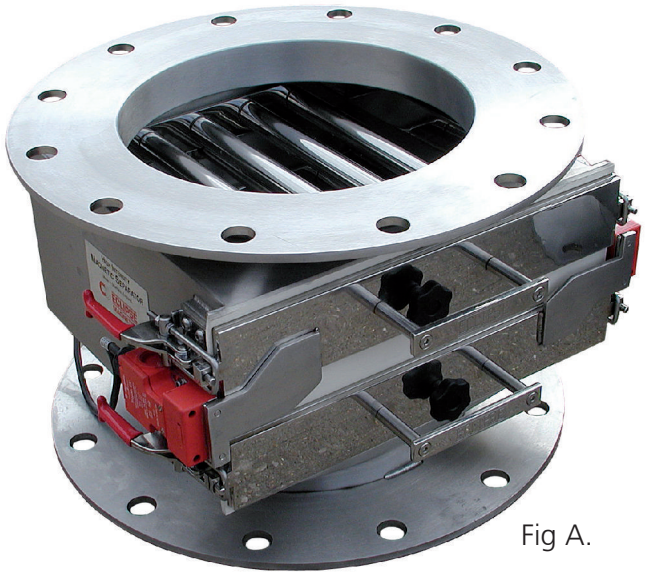

Fig A.

High intensity magnetic Easy Clean Housed Grids offer unsurpassed levels of contamination removal, removing sub-micron ferrous and para-magnetic contamination from the most demanding and arduous of process environments.

The unit contains two high intensity Easy Clean Magnetic Grids with the rods of each grid offset for maximum efficiency. The grids are secured into the housing by tri-cone locking nuts, which ensure even pressure is generated around the food grade seal.

Units can be supplied with quick release toggle clamps if cleaning time is to be kept to a minimum. Alternatively, consider the Auto-Shuttle unit, which requires no intervention.

Common installation locations are raw material inlet points and post-silo etc. It is common to have numerous units installed throughout a processing facility to ensure contamination is removed at source of generation.

All dry powders and granular type materials can be processed through the unit. Electrical safety interlocks can be fitted to each grid row to stop the process should they be accidentally opened (see Fig A.)

Cleaning

This unit uses the 'Easy Clean' system.
This design allows all attracted contamination to be easily and quickly collected for further inspection or analysis.
When the unit requires cleaning, simply remove the outer grid securing tri-cone locking nuts and remove the grid from the housing. Remove the central tri-cone locking nut and separate the grid assembly allowing all attracted contamination to simply fall away.

Suitable Products

Dry powders and granulates.

Suitable Locations

Inlet / outlet points, pre- / post-silo and machinery points.

Benefits

- Easy to clean
- High collection capacity
- Reduces 'spark' risk
- Removes sub-micron sized contamination
- Meet audit requirements
- Rare earth 7,000, 9,000 Gauss

Category

Secondary protection - fines.

Fischer-Robertson, Inc.
3890 Symmes Road
Hamilton, OH 45015
ph 513-860-3445 fx 513-860-4744
www.fischer-robertson.com

Technical Data

Round

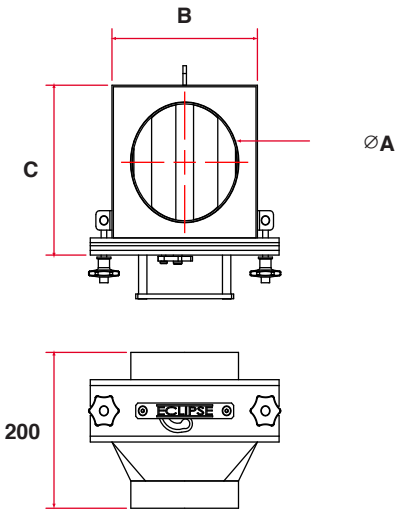

Square

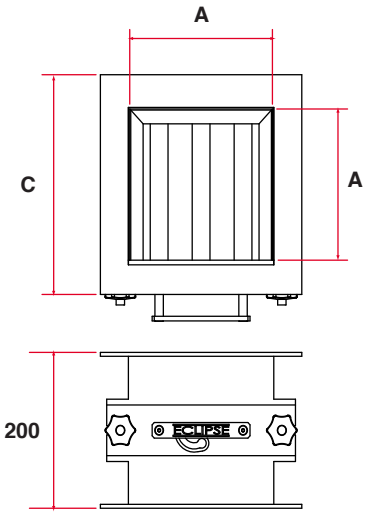

Product Information

Part Number	ØA mm	B mm	C mm	No. of Rods	Weight kg
Round					
ECHD100	100	158	168	2 +1	10
ECHD150	150	208	218	3 +2	13
ECHD200	200	258	268	4 +3	18
ECHD250	250	308	318	5 +4	24
ECHD300	300	358	368	6 +5	31
ECHD350	350	408	418	7 +6	38
ECHD400	400	458	470	8 +7	47
Square					
ECHD1515	150	150	230	2 +1	10
ECHD2020	200	200	280	3 +2	15
ECHD2525	250	250	330	4 +3	22
ECHD3030	300	300	380	5 +4	26
ECHD3535	350	350	430	6 +5	30
ECHD4040	400	400	480	7 +6	34

Performance

Magnetic performance	*7,000 Gauss - standard strength 9.000 Gauss - high strength
Performance reading	On tube surface
Magnetic material	Rare earth neodymium iron boron
Magnet grade	N45 – Inspected and confirmed via hysterograph prior to use
Temperature	-20°C / +90°C
Pressure	+ / - 0.2 Bar
Materials	
Housing	316 grade stainless steel
Other Parts	316 grade stainless steel
Surface finish	Brushed internally / externally to 1.2µm
Sealing	Self adhered white foam
Tri-cone Nuts	Brass and Moulded Plastic

Options

- Stainless steel toggle clamps
- High temperature samarium cobalt magnetic material, +250°C
- Overpressure to + / - 10 Bar
- Sizes up to 500mm special sizes on request
- 304 grade stainless steel
- Pharmaceutical specification
- ATEX certified
- Flanged to suit
- Safety relay switches
- Metal detectable silicon rubber seal – dark blue, FDA approved
- Grid support track system

Fischer-Robertson, Inc.
3890 Symmes Road
Hamilton, OH 45015
ph 513-860-3445 fx 513-860-4744
www.fischer-robertson.com

Auto-Shuttle Magnet Double Row

High Intensity – Rare Earth

Datasheet No. 512

The Auto-Shuttle magnetic separator enables screening of processed products 24 hours a day, seven days a week, without the need for manual intervention. The system can even carry out a full clean without the need to stop the process.

The unit is supplied with a pre-programmed PLC that can either work independently or connected to the central control rooms system for remote activation or monitoring etc.

There are reed switches fitted to each end of the separator tubes to indicate the position of each magnetic core. The full system remains air tight throughout normal operation making it suitable for environments where ATEX equipment is required.

Cleaning

The magnetic cores remain in the process chamber until a cleaning signal is given. Then compressed air is fed into each separator tube forcing the core to the other end of the unit. The contamination follows the core, which first passes through the product return chamber, which prevents loss of good product, and into the cleaning chamber where the collected contamination is deposited.

The cleaning chamber is fitted with a transition piece, which allows a collection container to be fitted. It is this container that is removed to assess the collected contamination.

Suitable Products

Dry powders and granulates, flour, sugar, herbs and salt, etc

Suitable Locations

Any vertical process line.

Benefits

- Fully autonomous in operation
- Reduces 'spark' risk
- Suitable for control room connection
- Removes micron sized contaminants
- Meet audit requirements
- Rare earth 7,000, 9,000 Gauss

Category

Secondary protection - fines.

Fischer-Robertson, Inc.
3890 Symmes Road
Hamilton, OH 45015
ph 513-860-3445 fx 513-860-4744
www.fischer-robertson.com

Technical Data

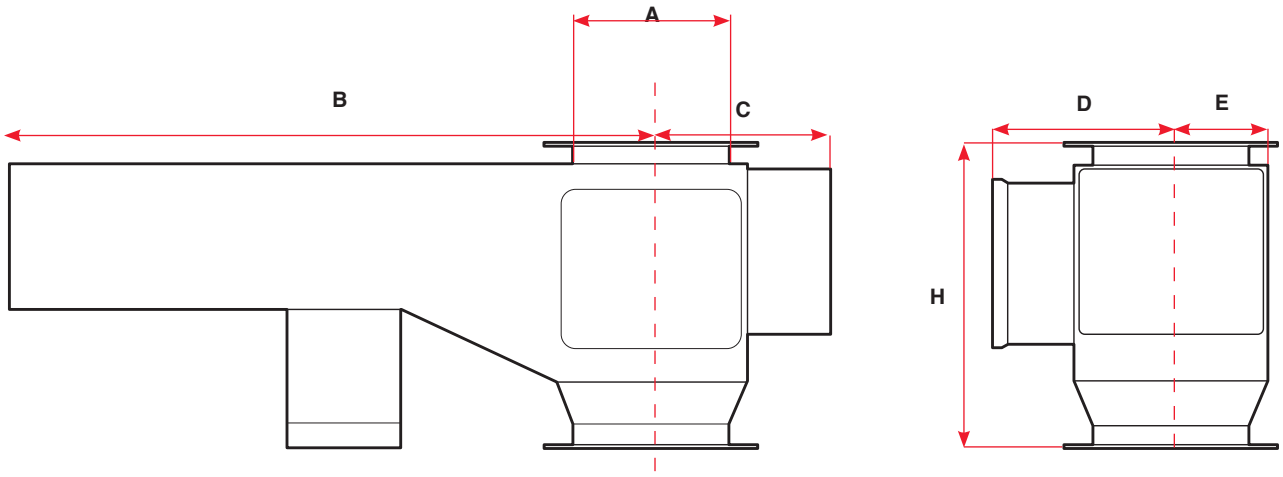

Product Information

Part Number	Inlet/Outlet A mm	B mm	C mm	D mm	E mm	H mm	No. of Rods	Weight kg
Round								
ASHD150	150	775	217	215	103	400	3 + 2	31
ASHD200	200	850	242	240	128	400	3 + 2	38
ASHD250	250	925	267	265	153	400	4 + 3	47
ASHD300	350	1000	292	290	178	400	5 + 4	58
ASHD350	350	1075	317	315	203	400	6 + 5	69
ASHD400	450	1150	342	340	228	400	7 + 6	81
ASHD450	450	1225	367	365	253	400	8 + 7	96
Square								
ASHD1515	150	192	192	190	78	350	2 + 2	24
ASHD2020	200	217	217	215	103	350	3 + 2	28
ASHD2525	300	242	242	240	128	350	3 + 2	35
ASHD3030	300	267	267	265	153	350	4 + 3	43
ASHD3535	400	292	292	290	178	350	5 + 4	52
ASHD4040	400	317	317	315	203	350	6 + 5	61
ASHD4545	450	342	342	340	228	350	7 + 6	74

Performance

Magnetic performance *7,000 Gauss - standard strength
9,000 Gauss high strength
Performance reading On tube surface
Magnetic material Rare earth neodymium iron boron
Magnet grade N45 – Inspected and confirmed via hysterograph prior to use
Temperature -20°C / +60°C
Pressure + / - 0.2 Bar

Materials

Housing 316 grade stainless steel
Tubing 316 grade stainless steel – aerospace quality
Other Parts 316 grade stainless steel
Surface finish Brushed internally / externally to 1.2µm
Sealing Self adhered white foam
PLC Crouzet, pre-programmed

Options

- High temperature samarium cobalt magnetic material +250°C
- Overpressure to +5 Bar
- Siemens, Mitsubishi or Allen Bradley PLC
- 304 grade stainless steel
- Pharmaceutical specification
- ATEX certified
- Metal detectable silicon rubber seal – dark blue, FDA approved
- Flanged to suit
- Single, triple and quad row units available

*7,000 Gauss should be selected for bread flour applications to allow for permissible iron oxide

Pneumag

Fischer-Robertson, Inc.
3890 Symmes Road
Hamilton, OH 45015
ph 513-860-3445 fx 513-860-4744
www.fischer-robertson.com

Datasheet No. 513

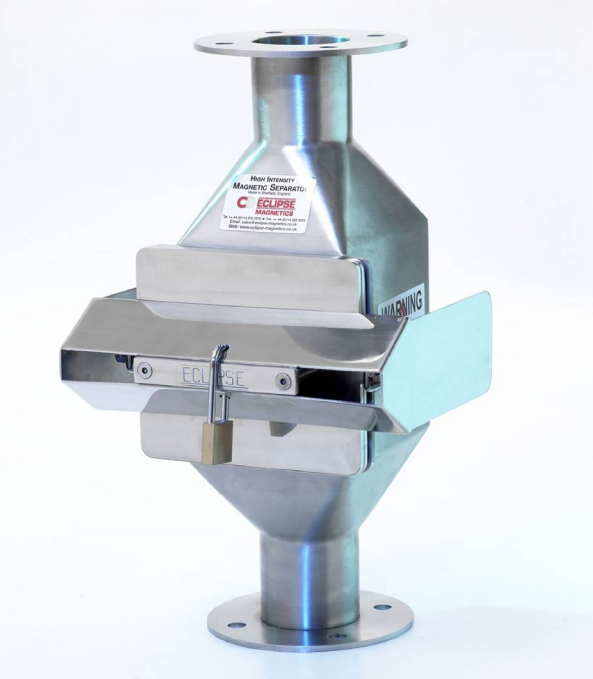

The Pneumag high intensity magnetic separator has been designed to operate in pneumatic conveying lines to provide protection against ferrous and para-magnetic contamination.

The unit contains a single double row high intensity magnetic cartridge. It is secured into its housing by quick release toggle clamps, which ensure even pressure is generated around the unique silicon-based metal-detectable seal.

The Pneumag can be incorporated into any form of pneumatic conveying line, from lean to dense phase, and can be installed at any angle from vertical to horizontal. A common installation location is at tanker discharge to inspect incoming materials.

All dry powders and granular type materials can be processed through the unit. Pneumag can operate in line pressures of +/-1 Bar, units are available up to +/-5 Bar on request, with a maximum processing line speed of 35m / sec.

A lockable tamper proof cover plate is provided to ensure only authorised personnel have access to the unit.

Cleaning

The Pneumag uses the 'Easy Clean' system.

To clean, simply release the quick release toggle clamps, remove the contaminated cartridge from the housing and then remove the magnetic cores from the tube assembly. All attracted contamination will be released allowing for inspection or further analysis.

Suitable Products

Dry powders and granulates.

Suitable Locations

All.

Benefits

- Easy to clean
- Tamper poof guard
- Metal detectable seal
- Reduces 'spark' risk
- Removes sub-micron sized contaminants
- Meet audit requirements
- Rare earth 7,000, 9,000 Gauss

Category

Secondary protection - fines.

Fischer-Robertson, Inc.
3890 Symmes Road
Hamilton, OH 45015
ph 513-860-3445 fx 513-860-4744
www.fischer-robertson.com

Technical Data

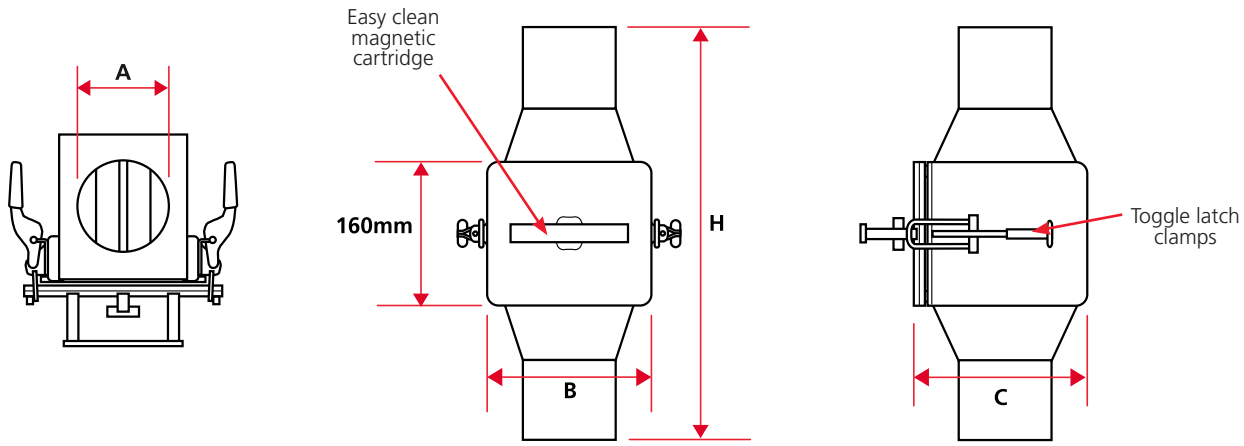

Product Information

Part Number	Spout Dia. A mm	B mm	C mm	H mm	No. of Rods	Weight kg
PNEU50	50	150	132	460	3	8
PNEU75	75	180	180	460	4	11
PNEU100	100	180	180	460	4	11
PNEU125	125	240	220	500	6	18
PNEU150	150	240	220	500	6	18
PNEU175	175	290	272	500	8	24
PNEU200	200	290	272	500	8	24

Performance

Magnetic performance 7,000* Gauss standard strength
9,000 Gauss high strength
Performance reading On tube surface
Magnetic material Rare earth neodymium iron boron
Magnet grade N45 – Inspected and confirmed via hysterograph prior to use
Temperature -20°C / +60°C
Pressure + / - 1 Bar

*7.000 Gauss should be selected for bread flour applications to allow for permissible iron oxide.

Materials

Housing 316 grade stainless steel
Tubing 316 grade stainless steel – aerospace quality
Other Parts 316 grade stainless steel
Surface finish Brushed internally / externally to 1.2µm
Sealing Metal detectable silicon rubber – dark blue, FDA approved
Toggle Clamps Mild steel – Bright Zinc plated

Options

- Stainless steel toggle clamps
- High temperature samarium cobalt magnetic material +250°C
- 11,000 Gauss fixed grid
- Overpressure to + / - 5 Bar
- Double magnetic core arrangement
- 304 grade stainless steel
- ATEX certified
- Pharmaceutical specification
- Safety relay switch
- Flanged to suit

*7,000 Gauss should be selected for bread flour applications to allow for permissible iron oxide

Rota-Grid Magnet

High Intensity – Rare Earth

Fischer-Robertson, Inc.
3890 Symmes Road
Hamilton, OH 45015
ph 513-860-3445 fx 513-860-4744
www.fischer-robertson.com

Datasheet No. 514

The high intensity magnetic Rota-Grid separator has been designed specifically to process difficult products that are prone to bridging and/or caking.

The unit contains a centrally mounted magnetic 'rota' assembly: numerous 'Easy Clean' magnetic rods are arranged in a 'wheel' around and parallel to the axis of rotation. The number of rods used depends on the inlet and outlet size.

The assembly rotates, gently agitating the product being processed. It is this agitation that prevents blockages occurring.

All dry and semi-dry powders and granular type materials, such as starch etc., can be processed through the unit. The Rota-Grid can be supplied to the most stringent of standards, such as required in the pharmaceutical industry.

Cleaning

As the Rota-Grid uses the 'Easy Clean' system, cleaning can be completed in a matter of minutes.

To clean, simply remove the door and remove the assembly from the housing. Remove the magnetic cores from the assembly. All attracted contamination will then be released allowing for inspection or further analysis.

Suitable Products

Dry and semi-dry powders and granulates, starch, protein etc.

Suitable Locations

Any vertical process line.

Benefits

- Easy to clean
- Allows difficult products to be screened
- Reduces 'spark' risk
- Removes sub-micron sized contaminants
- Meet audit requirements
- Rare earth 7,000, 9,000 Gauss

Category

Secondary protection - fines.

Fischer-Robertson, Inc.
3890 Symmes Road
Hamilton, OH 45015
ph 513-860-3445 fx 513-860-4744
www.fischer-robertson.com

Technical Data

Round

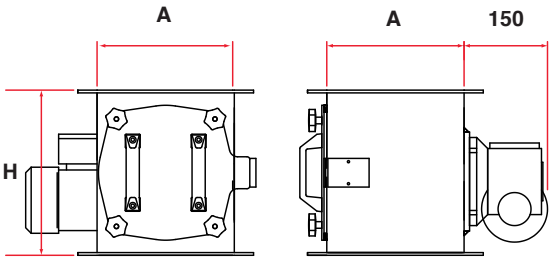

Square

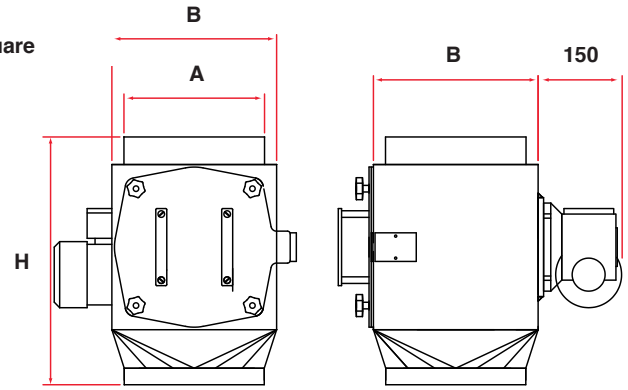

Product Information

Part Number	Spout Dia. Ø A mm	Width × Depth B mm	H mm	kW rating	No. of Rods	Weight kg
Round						
RG200	200	250 × 250	450	0.25	6	35
RG250	250	300 × 300	500	0.25	7	44
RG300	300	350 × 350	550	0.25	9	55
RG350	350	400 × 400	600	0.25	10	68
RG400	400	450 × 450	650	0.25	13	82
Square						
RG2020	200	200 × 200	250	0.18	5	26
RG2525	250	250 × 250	300	0.25	6	33
RG3030	300	300 × 300	350	0.25	7	43
RG3535	350	350 × 350	400	0.25	9	54
RG4040	400	400 × 400	450	0.25	10	67

Performance

Magnetic performance	*7,000 Gauss - standard strength 9,000 Gauss - high strength
Performance reading	On tube surface
Magnetic material	Rare earth neodymium iron boron
Magnet grade	N45 – Inspected and confirmed via hysterograph prior to use
Temperature	-20°C / +60°C
Electrical Spec	415 / 380 Volts industrial three phase IP65 rated motor gearbox

Material

Housing	316 grade stainless steel
Tubing	316 grade stainless steel – aerospace quality
Other Parts	316 grade stainless steel
Surface finish	Brushed internally / externally to 1.2µm
Sealing	Self adhered white foam
Tri-cone Nuts	Stainless steel and moulded plastic

Options

- Stainless steel toggle clamps
- High temperature samarium cobalt magnetic material +250°C
- 11,000 Gauss fixed grid
- Overpressure to + / - 5 Bar
- 304 grade stainless steel
- Pharmaceutical specification
- ATEX certified
- Metal detectable silicon rubber seal – dark blue, FDA approved
- Flanged to suit

Fischer-Robertson, Inc.
3890 Symmes Road
Hamilton, OH 45015
ph 513-860-3445 fx 513-860-4744
www.fischer-robertson.com

Chute Magnet

High Intensity – Rare Earth

Datasheet No. 517

Fig. A

The high intensity magnetic Chute Magnet has been designed to operate in arduous conditions and where contamination size is relatively large e.g. nuts, bolts etc.

The unit has two hinged, high intensity magnetic packs, which are secured to a housing by an adjustable hinge arrangement and tri-cone locking nut. These tri-cone nuts ensure even pressure is generated around the food grade silicon seal.

The chute magnet can be incorporated into any form of vertical or angled pipe or chute section. A common installation location is raw material inlet points for products such as grain, rice, corn, bran and animal feed etc.

A central diverter is mounted on the inlet. This directs processed product onto the magnetic face ensuring a high contamination removal rate.

All dry powders and granular type materials can be processed through the unit.

Electrical safety interlocks can be fitted to the magnetic packs to stop the process should they be accidentally opened.

Cleaning

The Chute Magnet benefits use the 'Easy Clean' system (Fig. A).

Simply release the quick-release toggle clamps, swing the packs away from the line and hinge the easy clean plates away. The collected contamination will be free from magnetic attraction and can be simply and easily removed allowing for inspection or further analysis.

Suitable Products

Dry powders and granulates.

Suitable Locations

Inlet / outlet points.

Benefits

- Easy to clean
- Maintains full flow
- High collection capacity
- Reduces 'spark' risk
- Removes 'tramp' sized contaminants
- Meet audit requirements
- Rare earth deep magnetic field

Category

Primary protection - tramp.

Fischer-Robertson, Inc.
3890 Symmes Road
Hamilton, OH 45015
ph 513-860-3445 fx 513-860-4744
www.fischer-robertson.com

Technical Data

Round

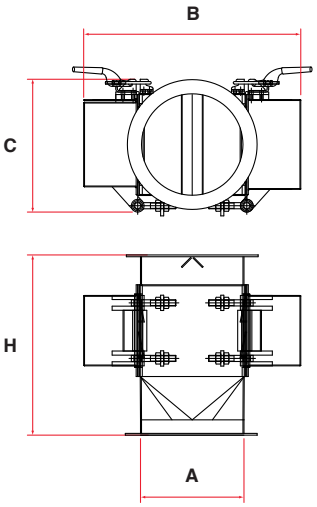

Square

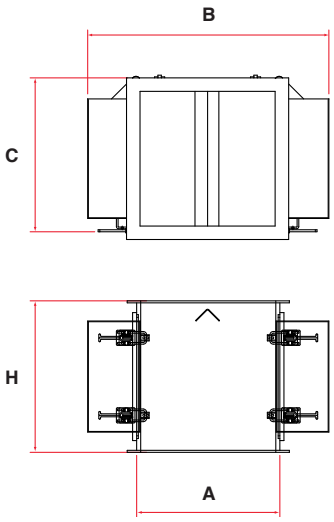

Product Information

Part Number	Inlet / Outlet A mm	B mm	C mm	H mm	Weight kg
Round					
CMN150	150	300	250	270	24
CMN200	200	350	300	270	32
CNM250	250	400	360	370	42
CMN300	300	450	420	370	56
Square					
CMN1515	150	280	240	220	22
CMN2020	200	330	280	220	30
CMN2525	250	380	350	300	39
CMN3030	300	430	400	320	52

Performance

Magnetic performance	3,500 Gauss
Performance Reading	On magnetic pack surface
Magnetic material	Rare earth neodymium iron boron
Magnet grade	N35 – Inspected and confirmed via hysterograph prior to use
Temperature	-20°C / +60°C
Pressure	+ / - 0.2 Bar

Materials

Housing	316 grade stainless steel
Other Parts	316 grade stainless steel
Surface finish	Brushed internally / externally to 1.2µm
Sealing	Self adhered white foam
Toggle Clamps	Mild steel – bright zinc plated

Options

- Stainless steel toggle clamps
- High temperature samarium cobalt magnetic material, +250°C
- Overpressure to + / - 5 Bar
- Sizes up to 500mm Ø or square
- 304 grade stainless steel
- Pharmaceutical specification
- ATEX certified
- Flanged to suit
- Safety relay switches
- Metal detectable silicon rubber seal – dark blue, FDA approved
- Ceramic magnetic material

Ingredient Sieve

Hand Operated

Fischer-Robertson, Inc.
3890 Symmes Road
Hamilton, OH 45015
ph 513-860-3445 fx 513-860-4744
www.fischer-robertson.com

Datasheet No. 590

SieveGuard

Screening incoming ingredients is easy with the free-standing hand ingredient sieve.
Sieving can significantly reduce the risk of introducing glass, plastic, steel, wood, insects, paper, card and organic materials into your product.

Sieving also removes irregular shaped ingredients.

The frame is sturdy, fully-welded 316 grade stainless steel. It is easily moved using the attached 'tilt' wheels.

The sieve is available in 2 sizes – 450mm and 600mm diameter – and can be supplied with a high-intensity grid magnet. This sits below the screen and removes any ferrous contamination that passes through the screen (see data sheet 505).

Cleaning

Cleaning is easy and can be completed within a minute.

Suitable Products

Dry powders, granulates, liquids.

Benefits

- Easy to clean
- Highly polished finish
- Fully mobile
- Includes on/off switch and main isolation switch
- Compact size
- Ultra-quiet operation

Category

Ingredient sieving.

Fischer-Robertson, Inc.
3890 Symmes Road
Hamilton, OH 45015
ph 513-860-3445 fx 513-860-4744
www.fischer-robertson.com

Technical Data

SU450

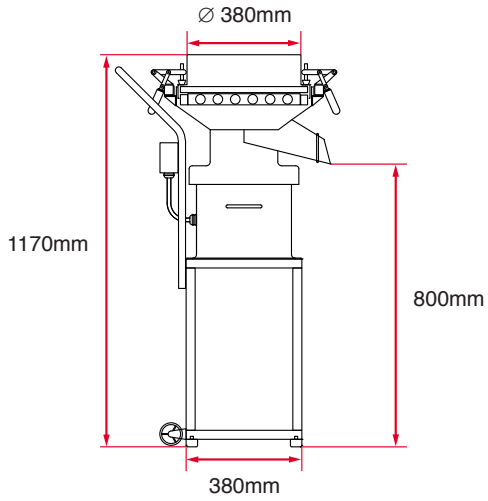

SU600

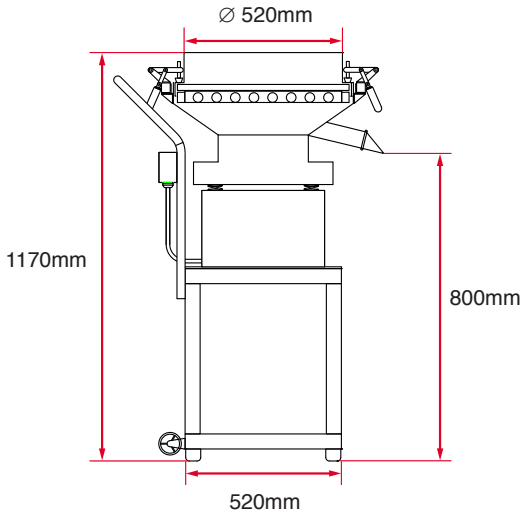

Product Information

Part Number	Top pan capacity litres	Max. throughput kgs per hour*	Weight kgs
SU540	10	200	65
SU600	20	400	95

*Estimated: sieving flour using #60 screen

Performance

Operating voltage	220 – 240 volts
Operating frequency	50 – 60 Hz
Motor speed	1440 rpm
Noise level	<70 dB
Temperature	5°C – 40°C

Materials

Main body	316 grade stainless steel
Top pan	316 grade stainless steel
Surface finish	Highly polished
Sealing	Silicon, metal-detectable, blue. FDA approved
Thumb clamps	304 grade stainless steel

Options

- Sieve magnet 11,000 Gauss
- ATEX certified
- Larger top pan
- Dust hood
- Dust hood incorporating bag station

Fischer-Robertson, Inc.
3890 Symmes Road
Hamilton, OH 45015
ph 513-860-3445 fx 513-860-4744
www.fischer-robertson.com

Sampling Probe Magnet

High Intensity – Rare Earth

Datasheet No. 502

The high intensity magnetic Sampling Probe is ideal for quality control personnel to quickly and easily carry out product purity inspections on any powder, granulate or liquid for ferrous or para-magnetic contamination.

The probe should be used for sample inspection of product at goods inward, prior to despatch and at critical control points throughout the process line for batch testing.

Simply allow the processed product to pass over the magnetic section of the probe or agitate in any static product. Any ferrous or para-magnetic contamination present will be highly visible when concentrated on the probe's surface.

Cleaning

Cleaning can be conducted in seconds. Remove the unit from the sampling area and, while holding the body of the probe, simply pull the rear handle backwards. This will release any attracted contamination enabling further analysis to be conducted.

Suitable Locations

Any powders, granulates, liquids, sauces, juices, chocolate etc.

Benefits

- Easy to clean
- Simple to use
- Indicates if contamination is present
- Removes micron sized contaminants
- Meet audit requirements
- Rare earth 9,000 Gauss

Category

Secondary protection - fines.

Fischer-Robertson, Inc.
3890 Symmes Road
Hamilton, OH 45015
ph 513-860-3445 fx 513-860-4744
www.fischer-robertson.com

Technical Data

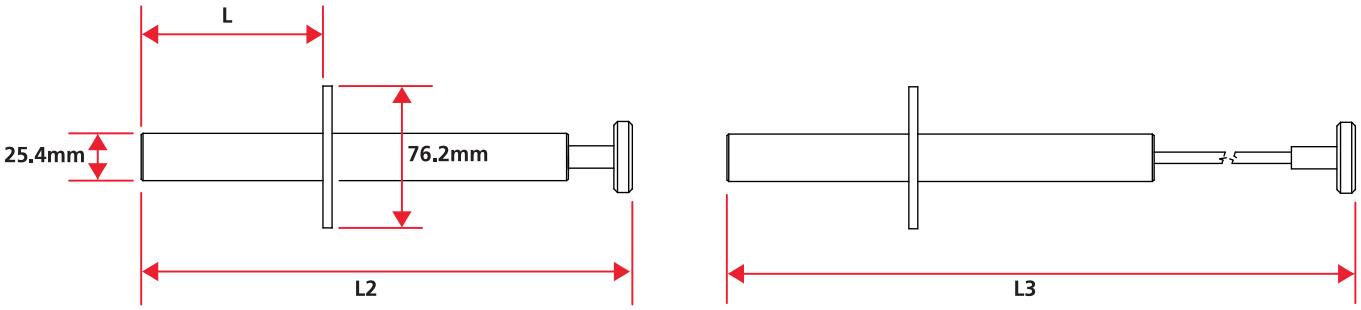

Product Information

Part Number	L mm	L2 mm	L3 mm	Weight kg
MSP100	100	265	395	0.9
MSP200	200	365	495	1.2
MSP300	300	465	595	1.6

Performance

Magnetic performance 9,000 Gauss high strength
Performance reading On tube surface
Magnetic material Rare earth neodymium iron boron
Magnet grade N45 – Inspected and confirmed via hysterograph prior to use
Temperature -20°C / +90°C

Materials

Tubing 316 grade stainless steel – aerospace quality
Other parts 316 grade stainless steel
Surface finish Polished to 0.6µm

Options

- High temperature samarium cobalt magnetic material +250°C
- Pharmaceutical specification
- Magnetic lengths up to 1000mm
- ATEX certified