# Fulflo® CB Bag Filter Vessels

## Carbon steel, 304/316 stainless steel, non-ASME code bag filter vessel

The Fulflo® CB filter vessel series is an economical design that features the integrity of a swing bolt for fast, easy opening and closing. The CB series is available in either carbon steel, 304 or 316 stainless steel. It comes with standard zinc plated bolts and legs for corrosion resistance but are also offered with stainless steel options. The integral basket support provides a smooth interior for easy cleaning and bag installation.

The Fulfo CB filter vessel is for use with either single or double length bags with flex type bands or flared plastic rings and can also be used with solid ring and plastic ring bags by using the optional bag sealing insert and adding an O-ring under the basket rim. The adjustable legs offer installation flexibility by allowing various inlet elevations and nozzle orientations. Wall mounting brackets are available as well.

The CB filter vessel series replaces the FCB fi lter vessel series.

## Benefits

- Single O-ring design closure assures quick, positive cover sealing
- Swing bolts for fast, and easy opening and closing of cover
- Maximum design pressure is 175psi (12bar) at 250°F (121°C)
- Commercial engineering non-code design
- Threaded vent & drain connections
- Carbon steel with zinc plated support basket or 304/316 SS with 316 SS support basket
- Optional mounting wall bracket (P/N 0820-6005)
- Adjustable leg height
- Side inlet allows cover to open without disconnecting piping
- Integral basket support design provides a smooth interior for easy wash-out and cleaning
- Pivot pin cover allows cover to remain attached when opened
- Positive seal of “C” style flex band bags prior to closing the vessel cover
- Optional retainer assembly for conversion to solid ring (“G”style) and plastic ring (“Q” style) bags (P/N 5020-5244)
- Zinc plated closure bolts and legs for corrosion resistance

## Applications

- Potable Water
- Cutting Oils
- Solvents
- Coolants
- Process Water
- Coatings
- Lubricant

## Contact Information

FISCHER-ROBERTSON, INC.
FILTRATION & SEPARATION

(513) 860-3445
Sales@fischer-robertson.com

Parker

ENGINEERING YOUR SUCCESS.

# Fulflo® CB Bag Filter Vessels

**Available Finishes**

- Enamel exterior paint on carbon steel models
- Glass bead blast finish on stainless models

| Material of Construction | Max. Allowable Pressure (MAP) (psi @ MAT °F) | Max. Allowable Temp. (MAT) (°F @ MAPpsi) |
|---|---|---|
| Carbon Steel | 175psi (12.1bar) | 400°F (204°C)* ** |
| 304 Stainless | 175psi (12.1bar) | 400°F (204°C)** |
| 316 Stainless | 175psi (12.1bar) | 400°F (204°C)** |

* Limited to 250°F by the paint

**Limited to 250°F by the std. Buna-N O-ring

| Model *Material of Construction (C, G or S) | Bag Style | Typical Aqueous Flow† (gpm) | Dimensions | | | Shipping Weight (lbs) | Volume (gal.) |
|---|---|---|---|---|---|---|---|
| | | | D | E | OAH | | |
| CB*1S2T | Single | 80 | 20.41 | 25.00 | 40.94 | 65 | 4.3 |
| CB*1D2T | Double | 160 | 35.41 | 40.00 | 55.94 | 90 | 7.2 |

† Actual flow rate is dependent on fluid viscosity, micron rating, contaminant and media type. Consult flow charts for each application.

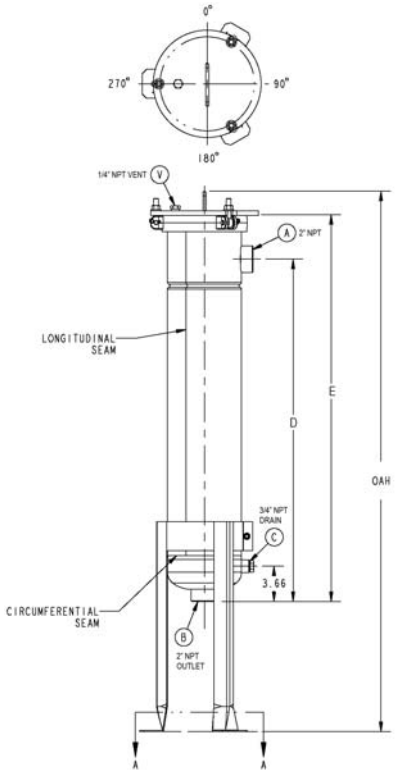


## Ordering Information

CB [ ] 1 [ ] 2T [ ]

| Material | |
|---|---|
| Code | Description |
| C | Carbon Steel |
| G | 304 Stainless Steel |
| S | 316 Stainless Steel |

| Bag Length | |
|---|---|
| Code | Inches |
| S | 17.5 |
| D | 31.5 |

| Inlet/Outlet Flange Size | |
|---|---|
| Code | Inches |
| 2T | 2" NPT |

| Support Options | |
|---|---|
| Code | Description |
| Blank | Zinc plated carbon steel legs |
| W | Wall Mounted/No legs |
| SL | Stainless steel legs |
| SB | Stainless steel cover bolts |
| SS | Stainless steel bolts & legs |

Example Part# Configuration for Orders (no dashes):
CBC1S2T
CBG1D2TW

Specifications are subject to change without notification.
For User Responsibility Statement, see www.parker.com/safety

© 2017 Parker-Hannifin Corporation
Industrial Process Filtration - North America
All Rights Reserved

Fulflo is a registered trademark of Parker-Hannifin Corporation
Viton is a registered trademark of E.I. DuPont de Nemours & Co., Inc.